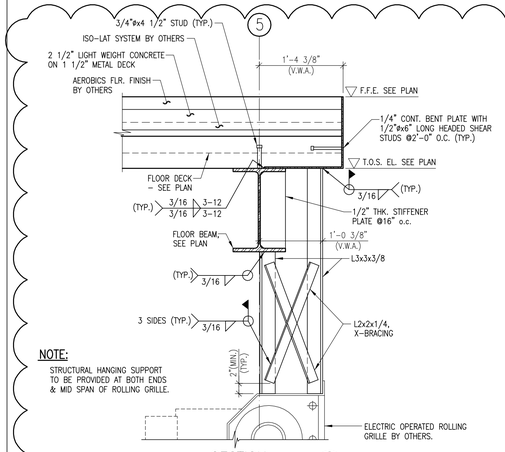

NOTE:
STRUCTURAL HANGING SUPPORT TO BE PROVIDED AT BOTH ENDS & MID SPAN OF ROLLING GRILLE.

SECTION 1/S0180
SCALE: 1"=1'-0"

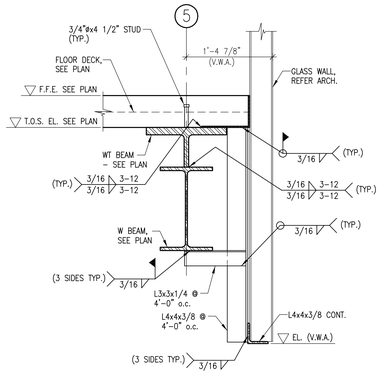

SECTION 2/S0180
SCALE: 1"=1'-0"

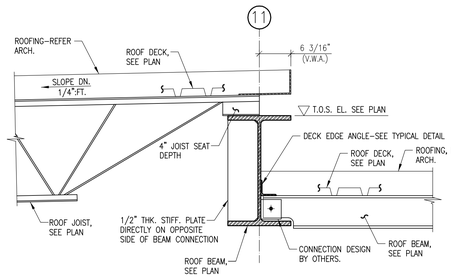

SECTION 3/S0180
SCALE: 1"=1'-0"

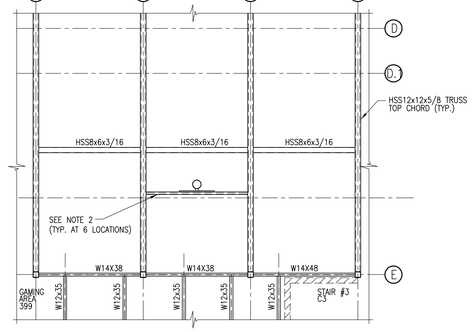

NOTES:
1. OTHER FRAMING MEMBER SIZE, MOMENT, SHEAR ETC., SEE ELSEWHERE.
2. PROVIDE BASKETBALL GOAL SUPPORTING MEMBER AS HSS5x5x3/8 BETWEEN THE BOTTOM CHORD TRUSS MEMBER. DO ENTIRE BASKETBALL GOAL SUPPORT SYSTEMS WITH A SINGLE MEMBER SIZE. THIS MEMBER WILL BE CENTERED ON AND FRAME INTO THE SIDE OF THE HSS12x12x1/2 BOTTOM CHORDS OF TRUSSES. ALL FIELD WELDING OF THESE MEMBERS SHALL BE ALL AROUND; AND OF CONSISTENT, HIGH QUALITY WORKMANSHIP DUE TO THE EXPOSED NATURE OF THE FLOOR STRUCTURE. PLEASE COORDINATE WITH ARCHITECT FOR BASKETBALL GOAL SUPPORT SYSTEM LOCATION.

PARTIAL LEVEL 02 FLOOR FRAMING PLAN-AREA-A 4/S0180
NOT TO SCALE

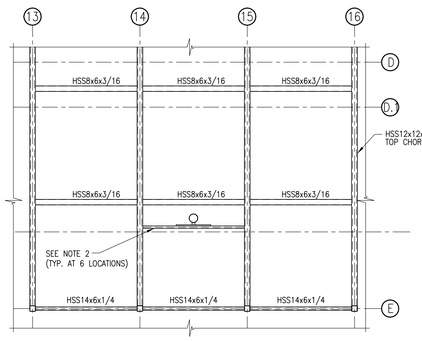

NOTES:
1. OTHER FRAMING MEMBER SIZE, MOMENT, SHEAR ETC., SEE ELSEWHERE.
2. PROVIDE BASKETBALL GOAL SUPPORTING MEMBER AS HSS5x5x3/8 BETWEEN THE BOTTOM CHORD TRUSS MEMBER. DO ENTIRE BASKETBALL GOAL SUPPORT SYSTEMS WITH A SINGLE MEMBER SIZE. THIS MEMBER WILL BE CENTERED ON AND FRAME INTO THE SIDE OF THE HSS12x12x5/16 BOTTOM CHORDS OF TRUSSES. ALL FIELD WELDING OF THESE MEMBERS SHALL BE ALL AROUND; AND OF CONSISTENT, HIGH QUALITY WORKMANSHIP DUE TO THE EXPOSED NATURE OF THE ROOF STRUCTURE. PLEASE COORDINATE WITH ARCHITECT FOR BASKETBALL GOAL SUPPORT SYSTEM LOCATION.

PARTIAL HIGH ROOF FRAMING PLAN 5/S0180
NOT TO SCALE

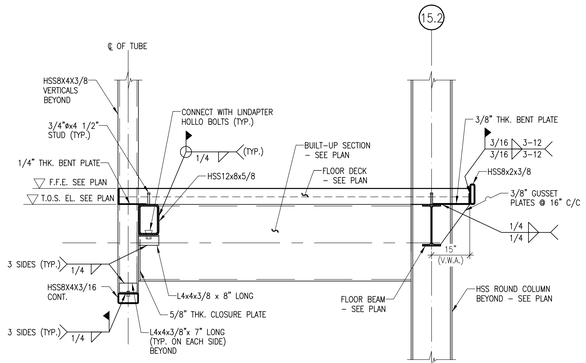

NOTE:
1. BEAM TO STRUCTURAL ROUND COLUMN CONNECTION DESIGN BY OTHERS.

SECTION 6/S0180
SCALE: 1/2"=1'-0"

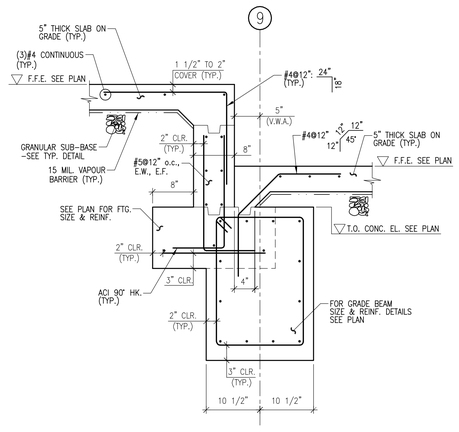

SECTION 7/S0180
SCALE: 1"=1'-0"

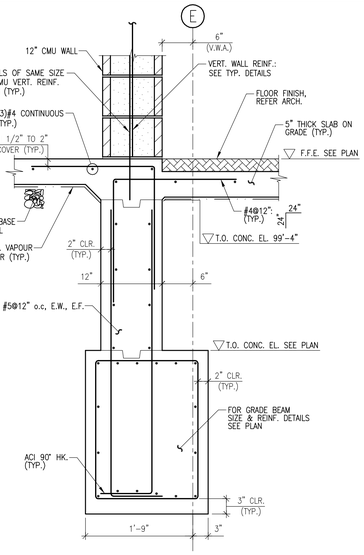

SECTION 8/S0180
SCALE: 1"=1'-0"

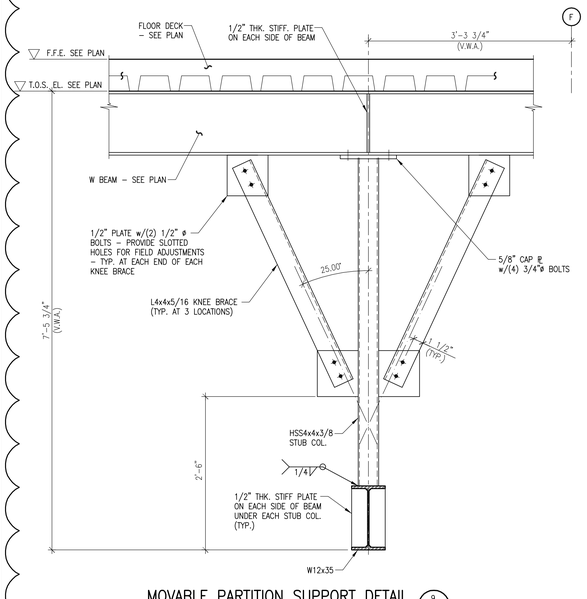

MOVABLE PARTITION SUPPORT DETAIL 9/S0180
SCALE: 1"=1'-0"

DISCLAIMER NOTE:
THIS SET OF CONSTRUCTION DRAWINGS HAS BEEN UPDATED TO INCLUDE ANY CHANGES ISSUED THROUGH ADDENDUM OR OTHER MEANS. EVERY EFFORT HAS BEEN TAKEN TO INCLUDE ALL CHANGES TO DATE. THE CONTRACTOR IS STILL RESPONSIBLE FOR PROVIDING ANY ITEMS THAT WERE SHOWN AS PART OF THE ORIGINAL BID SET THAT MAY HAVE BEEN OVERLOOKED AND NOT INCLUDED IN THIS SET.

© Cannon Design 2010
All rights reserved. No part of this document may be reproduced, stored in any form or by any means without written authorization by The Cannon Corporation.

University of Louisville – Student Recreation Center (Phase #4 – Construction Set) **Louisville, Ky**

RANGASWAMY AND ASSOC., INC.
Consulting Engineers
Suite 420, The Landmark Building
Louisville, Kentucky 40202
Phone: (502) 589-2040
Fax: (502) 589-2040 ; www.rangaswamy.com

Omni ARCHITECTS
212 North Upper Street
Lexington, Kentucky 40507-1001
p 859.252.6664 f 859.253.2358
www.omniarchitects.com

CANNONDESIGN

UNIVERSITY OF LOUISVILLE

#	Revision Date

Drawing Name: SECTIONS AND DETAILS
U of L Project Number:
Project Number: Omni – 1105.00 Cannon – 03667.00
Date: April 16, 2012
Drawn By: VPP Checked By: ANTHONY

S0180