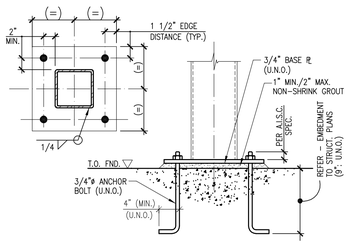

NOTES:

1. REFER TO STRUCTURAL PLANS FOR SPECIAL OR NON-STANDARD BASE PLATES & ANCHOR BOLT SIZES, & FOR T.O. FND. ELEVS. (TYP.)
2. REFER TO A.I.S.C. FOR PERMITTED OVERSIZE HOLES FOR ANCHOR BOLTS.
3. ANCHOR BOLTS SHALL HAVE A MINIMUM OF TWO FULL THREADS PROJECTING THROUGH THE TOP SIDE OF THE NUT AFTER FINAL TIGHTENING AND PLUMBING OF THE BASE PLATE.

TYPICAL BASEPLATE DETAILS (U.N.O.) 1 S0208
NOT TO SCALE

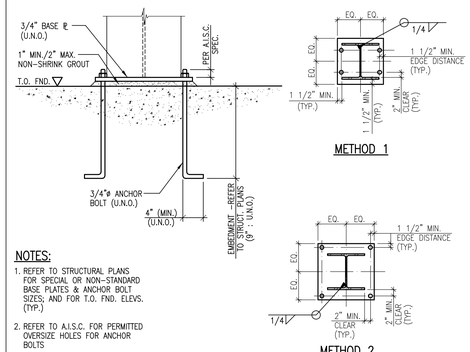

NOTES:

1. REFER TO STRUCTURAL PLANS FOR SPECIAL OR NON-STANDARD BASE PLATES & ANCHOR BOLT SIZES; AND FOR T.O. FND. ELEVS. (TYP.)
2. REFER TO A.I.S.C. FOR PERMITTED OVERSIZE HOLES FOR ANCHOR BOLTS
3. ANCHOR BOLTS SHALL HAVE A MINIMUM OF TWO FULL THREADS PROJECTING THROUGH THE TOP SIDE OF THE NUT AFTER FINAL TIGHTENING AND PLUMBING OF THE BASE PLATE.

TYPICAL BASEPLATE DETAILS (U.N.O.) 2 S0208
NOT TO SCALE

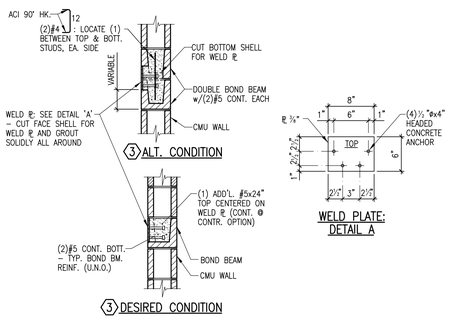

TYPICAL DETAIL - WELD PLATES IN CMU WALLS 3 S0208
NOT TO SCALE

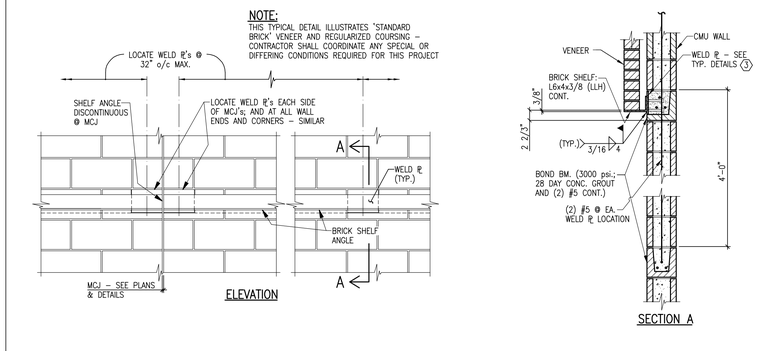

TYPICAL DETAIL - SHELF ANGLE FOR MASONRY VENEERS 4 S0208
NOT TO SCALE

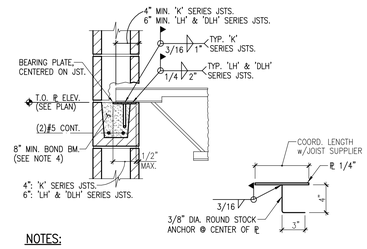

NOTES:

1. BOTTOM CHORD BEARING DETAILS ARE TO BE SIMILAR TO TOP CHORD DETAILS SHOWN.
2. 'CS' & 'VS' JOIST BEARING DETAILS ARE TO BE SAME AS 'K' SERIES DETAILS.
3. 'SLH' SERIES BEARING DETAILS ARE NOT SHOWN HERE.
4. WHERE JOIST BEARING ELEVATIONS ARE VARYING, SUCH AS AT ROOF JOISTS BEARING IN CURVED OR ANGLED WALLS, OR WHERE JOISTS DO NOT BEAR AT EVEN COURSES, THE CMU CORES AT THE JOIST BEARING LOCATION ARE TO BE SOLIDLY GROUTED UNTIL THEY ENCOUNTER A BOND BEAM (OR STL. BM., OR FND.) AT A LOWER ELEVATION.
5. REFER ELSEWHERE FOR JOIST BEARING DETAILS AT FIRE WALLS AND EXPANSION JOINTS.

TYPICAL BAR JOIST BEARING IN MASONRY WALL 5 S0208
NOT TO SCALE

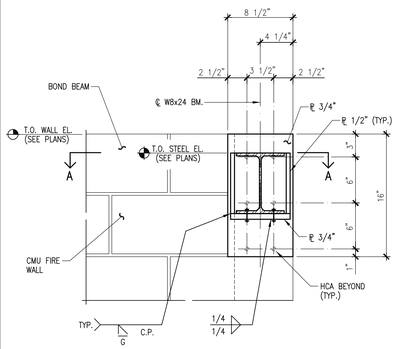

ELEVATION B-B

NOTES:

1. CORNER/TOP OF WALL CONDITION SHOWN HERE - OTHER LOCATIONS SIMILAR.
2. W8x24 BEAM SHOWN HERE - OTHER BEAM CONDITIONS SIMILAR.
3. CMU. REINF. NOT SHOWN HERE - SEE TYPICAL DETAILS.

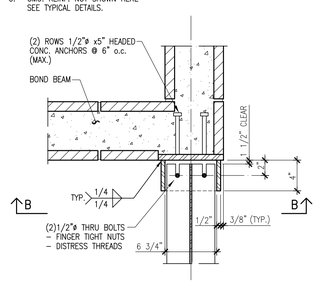

SECTION A-A

TYPICAL DETAIL - BEAM CONNECTION AT CMU FIRE WALL 6 S0208
NOT TO SCALE

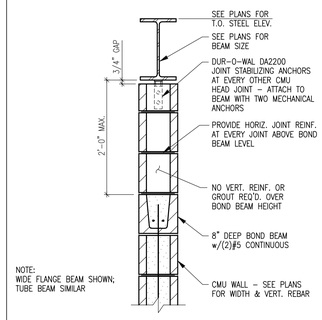

NOTE:
WIDE FLANGE BEAM SHOWN; TUBE BEAM SIMILAR

TYPICAL DETAIL - CMU WALL ATTACHMENT TO UNDERSIDE OF STEEL BEAM 7 S0208
NOT TO SCALE

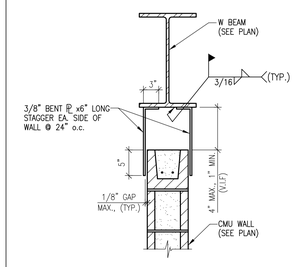

TYPICAL DETAIL OF BRACING INTERIOR CMU WALL TO THE BEAM 8 S0208
NOT TO SCALE

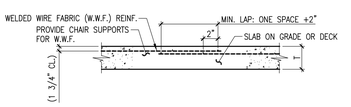

TYPICAL W.W.F. SLAB REINFORCEMENT PLACEMENT (U.N.O.) 9 S0208
NOT TO SCALE

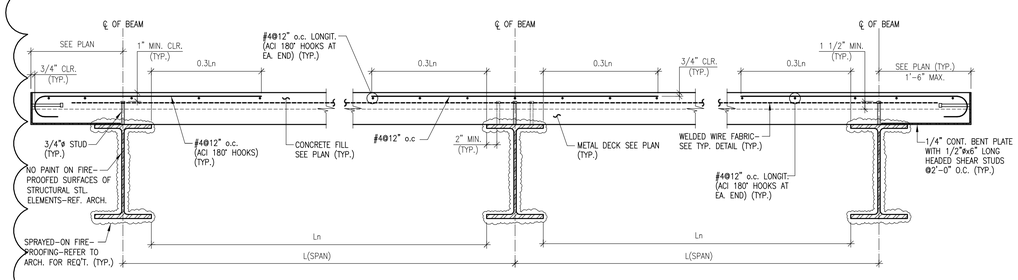

NOTES:

1. STUDS ARE TO BE PROPRIETARY MILD-STEEL SHEAR CONNECTERS, AND ARE TO BE WELDED THROUGH THE METAL DECK USING PROPRIETARY EQUIPMENT AND FERRULES. SUBMIT DOCUMENTATION FOR REVIEW BY ARCHITECT.
2. LOCATE SINGLE STUD ROWS ON ℄ BM. (EA. ROW-OF DOUBLE STUDS, WHERE REQUIRED, TO BE LOCATED 2" FROM EDGE OF FLANGE) - SEE PLANS FOR MIN. NUMBER OF STUDS PER BEAM.
3. SIMILAR CONDITION WHERE DECK ORIENTATION PARALLEL TO BEAM.
4. AT ALL PANEL ENDS AND AT ALL INTERMEDIATE BEAMS, JOISTS, TRUSSES AND OTHER BEARING POINTS: WHERE NO STUDS INFO. IS PROVIDED PROVIDE 5/8"ø PUDDLE WELD @12" o.c. MAX. (OR BUILDEX #12" SCREWS @12" o.c. MAX.)
5. AT ALL PANEL ENDS AND AT ALL INTERMEDIATE BEAMS, JOISTS, TRUSSES AND OTHER BEARING POINTS: WHERE NO STUDS INFO. IS PROVIDED PROVIDE 3/4"ø ARC PUDDLE WELD @12" o.c. MAX. (OR BUILDEX #12" SCREWS @12" o.c. MAX.)
6. SIDE LAPS: 1 1/2" LONG SEAM WELD @ 18" c/c MAX. (OR BUILDEX #12 TEKS SELF-TAPPING SCREWS @ 18" c/c MAX.)
7. SUBMIT SHOP DRAWINGS OF SHEAR CONNECTORS FOR ENGINEERS APPROVAL

COMPOSITE DECK TYPE	TOTAL SLAB DEPTH	STUD DETAIL*	REMARKS
1. VULCRAFT - 3VLI 18 GAGE GALV.	6 1/4" THK.	3/4"ø x4 1/2" LENGTH	REF. NOTE 4,6
2. EPIC WIDECK - EDCP750A 16/18 GAGE GALV.	10 1/2" THK.	3/4"ø x9" LENGTH	REF. NOTE 5,6

* FOR NUMBER OF STUDS- SEE PLAN

TYPICAL COMPOSITE SLAB REINF. DETAIL 10 S0208
NOT TO SCALE

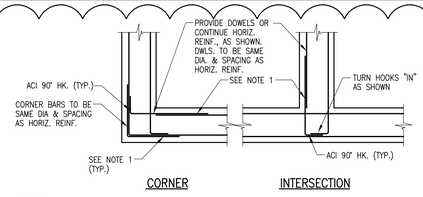

NOTE:

1. REFER TO GENERAL PROVISIONS FOR REBAR LAP LENGTHS.

TYPICAL DETAILS OF HORIZ. REINFORCEMENT @ R.C. WALL CORNERS AND INTERSECTIONS (U.N.O.) 11 S0208
NOT TO SCALE

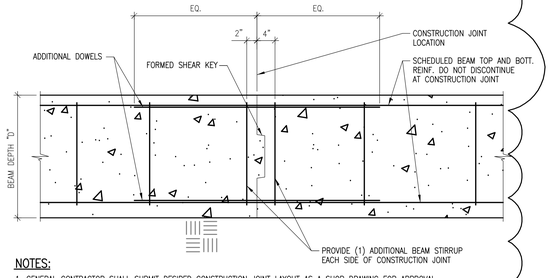

NOTES:

1. GENERAL CONTRACTOR SHALL SUBMIT DESIRED CONSTRUCTION JOINT LAYOUT AS A SHOP DRAWING FOR APPROVAL.
2. PROVIDE CONSTRUCTION JOINT LOCATION AT MID 1/3 OF SPAN.
3. MAX. DISTANCE BETWEEN CONSTRUCTION JOINTS TO BE 30'-0" IN ANY DIRECTION, UNLESS NOTED OTHERWISE.

TYPICAL DETAILS OF GRADE BEAM CONSTRUCTION JOINT 12 S0208
NOT TO SCALE

DISCLAIMER NOTE:
THIS SET OF CONSTRUCTION DRAWINGS HAS BEEN UPDATED TO INCLUDE ANY CHANGES ISSUED THROUGH ADDENDUM OR OTHER MEANS. EVERY EFFORT HAS BEEN TAKEN TO INCLUDE ALL CHANGES TO DATE. THE CONTRACTOR IS STILL RESPONSIBLE FOR PROVIDING ANY ITEMS THAT WERE SHOWN AS PART OF THE ORIGINAL BID SET THAT MAY HAVE BEEN OVERLOOKED AND NOT INCLUDED IN THIS SET.

University of Louisville - Student Recreation Center (Phase #4 - Construction Set) **Louisville, Ky**

RANGASWAMY AND ASSOC., INC.
Suite 420, The Landmark Building
Louisville, Kentucky 40202.
Phone : 502-589-2242
Fax : (502)589-2240 ; www.rangaswamy.com

Omni ARCHITECTS
212 North Upper Street
Lexington, Kentucky 40507-1001
p 859.252.6664 f 859.253.2358
www.omniarchitects.com

CANNONDESIGN

#	Revision Date

Drawing Name: TYPICAL DETAILS
U of L Project Number:
Project Number: Omni - 1105.00 Cannon - 03667.00
Date: April 16, 2012
Drawn By: VPP Checked By: ANTHONY

S0208

© Cannon Design 2010
All rights reserved. No part of this document may be reproduced, stored in a retrieval system, or transmitted in any form or by means, electronic, mechanical, photocopying, recording, or otherwise, without the prior written authorization by The Cannon Corporation.