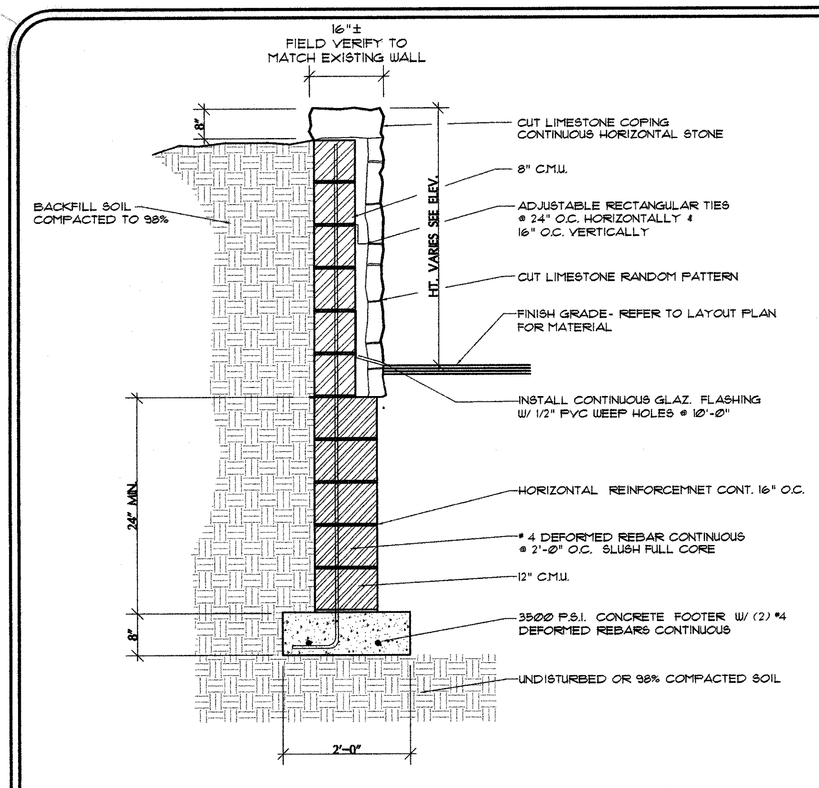

(A) STONE RETAINING WALL
SCALE: NTS

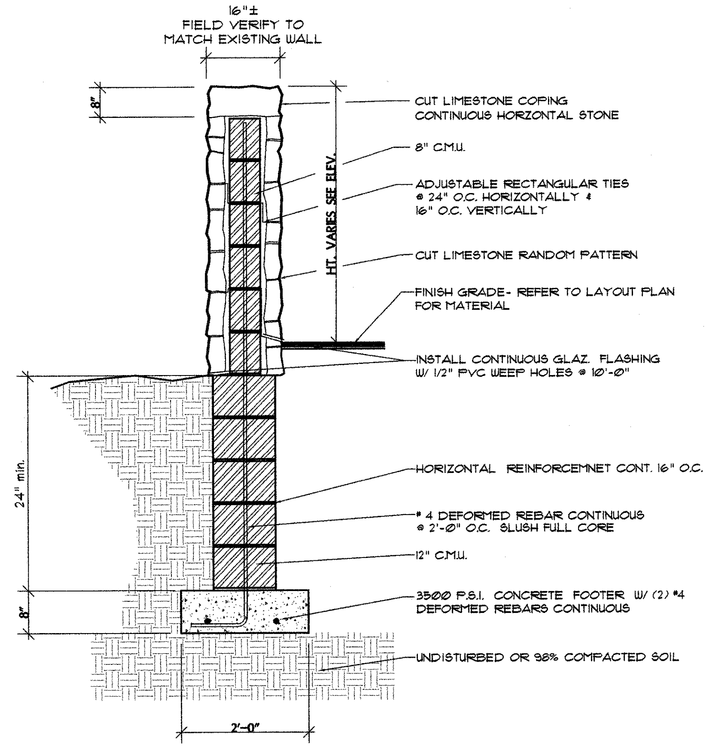

(C) STONE FREE STANDING WALL
SCALE: NTS

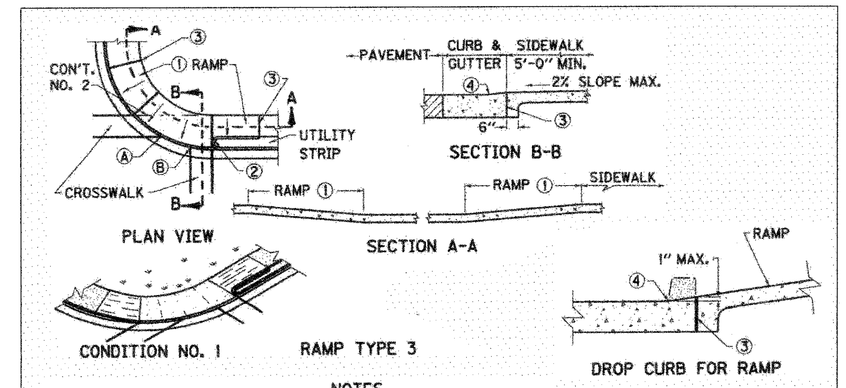

NOTES

RAMPS SHALL BE PAID PER SQ. YARD OF 4" CONC. SIDEWALK AND THE UNIT PRICE SHALL INCLUDE ALL MATERIALS, FORMS, AND INCIDENTALS NECESSARY FOR CONSTRUCTION.
THE RAMP SHALL BE CONSTRUCTED OF CLASS "A" CONCRETE. A BROOM FINISH OR EQUAL NON-SKID FINISH IS REQUIRED.
THE NORMAL GUTTER LINE SHALL BE MAINTAINED THROUGH THE AREA OF THE RAMP.
RAMPS SHOULD BE LOCATED WITHIN MARKED LIMITS OF CROSSWALKS.
USE RAMP TYPE 3 WHEN POINT A TO B IS LESS THAN 20 FEET.
USE RAMP TYPE 4 WHEN POINT A TO B IS 20 FEET OR MORE.
① MAX. RAMP SLOPE 12:1.
② CURB RETURN REQUIRED WHEN UTILITY STRIP IS 4 FEET OR GREATER. FOR UTILITY STRIPS LESS THAN 4 FEET, THE AREA IS TO BE SURFACED WITH SIDEWALK WITHIN THE RAMP.
③ 1/2" EXPANSION JOINT AT BACK OF CURB LINE AND AT SIDEWALK LINE.
④ NO BUMP PERMITTED. SAME SLOPE AS RAMP AND NOT TO EXCEED 1" IN HEIGHT.

(E) KYDOH SIDEWALK RAMPS
SCALE: NTS

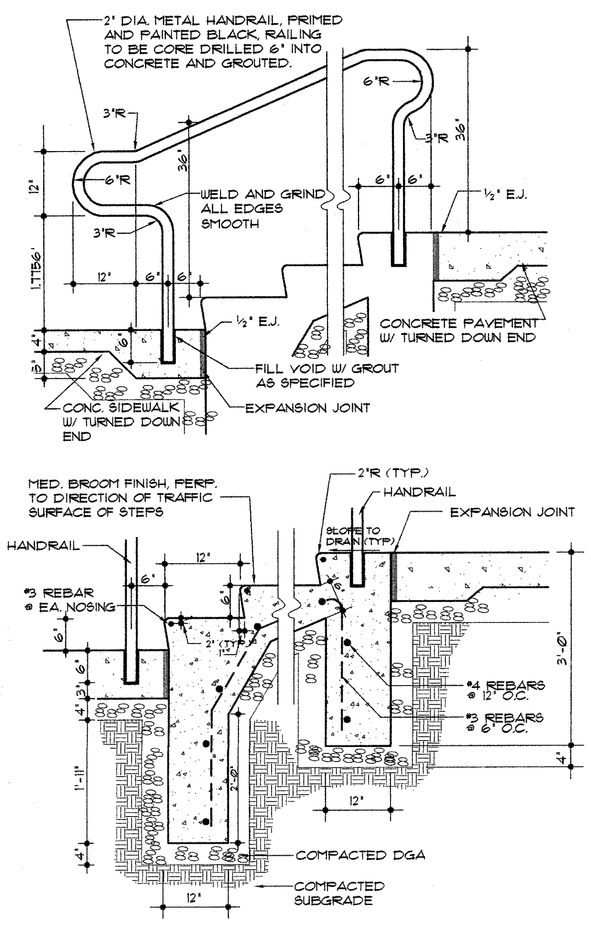

(B) CONCRETE STAIR AND RAIL
SCALE: NTS

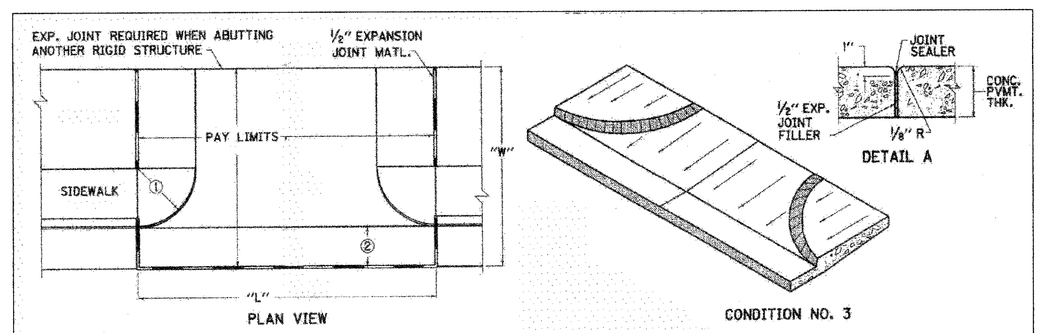

~ NOTES ~

① RADII: RESIDENTIAL - MINIMUM 2'-5", DESIRABLE 10'-0"
COMMERCIAL - MINIMUM 5'-0", MAXIMUM 30'-0"
② 1'-0" OR 2'-0" WITH CONCRETE PAVEMENT, 2'-0" WITH FLEXIBLE PAVEMENT
③ WHEN "L" IS GREATER THAN "W" A SAWED AND SEALED JOINT, 1/2" DEEP AND 1/4" WIDE, SHALL BE REQUIRED AT THE CENTER OF L .
4. CLASS "A" CONCRETE OR CEMENT CONCRETE PAVEMENT CONCRETE SHALL BE USED IN THE ENTRANCE PAVEMENT.
5. THE ENTRANCE PAVEMENT SHALL RECEIVE A BROOM FINISH AND SHALL BE CURED THE SAME AS THE MAINLINE PAVEMENT AND/OR SIDEWALK.
6. THE CONTRACT UNIT PRICE BID PER SQUARE YARD FOR "CONC. ENT. PAVEMENT-8 INCH (CODE NO. 2101)" SHALL INCLUDE CLASS "A" CONCRETE AND ALL INCIDENTALS NECESSARY TO COMPLETE THE WORK. D.G.A. SHALL BE A SEPARATE BID ITEM.
7. USE CONDITION NO. 3 WHEN NO UTILITY STRIP IS PROVIDED, AND INCORPORATE FEATURES OF OTHER DESIGNS SHOWN WHERE NOT IN CONFLICT.
8. THE ENGINEER MAY MODIFY THE DESIGN TO BETTER FIT EXISTING CONDITIONS.

(D) KYDOH ENTRANCE APRON
SCALE: NTS

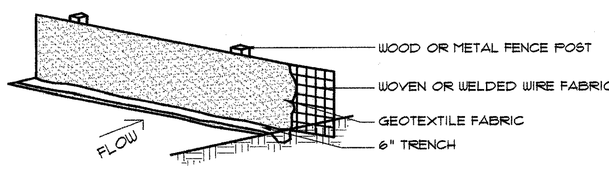

POSTS: HARDWOOD OR STEEL GREATER THAN 4' IN HEIGHT. FOR HARDWOOD, PROVIDE A MINIMUM 1 1/2" BY 1 1/2" CROSS SECTION. FOR STEEL, PROVIDE A 1 1/4" BY 1" T-SECTION WITH PROJECTIONS TO FASTEN WIRE AND FABRIC IN POSITION.
WOVEN OR WELDED WIRE FABRIC: PROVIDE FABRIC WITH A MINIMUM HEIGHT OF 2'-8". REQUIRE AT LEAST 6 HORIZONTAL WIRES SPACED 6 1/4 INCHES OR CLOSER WITH THE TOP AND BOTTOM WIRES Ø.134 INCH OR LARGER AND ALL OTHER WIRES Ø.1 INCH OR LARGER. REQUIRE Ø.1 INCH OR LARGER VERTICAL WIRES SPACED 12" OR CLOSER.
GEOTEXTILE FABRIC: CONFORM TO AASHTO M288 FOR TEMPORARY SILT FENCE. PROVIDE FABRIC WITH A HEIGHT OF 3'. FABRIC TO BE AMOCO 2130 OR EQUAL.

NOTES:
1. THE BOTTOM 6" OF GEOTEXTILE SHALL BE BURIED IN A TRENCH CUT INTO THE GROUND ON UPSTREAM SIDE OF FENCE.
2. FENCE POST AND FABRIC WILL BE ACCEPTED BASED ON VISUAL INSPECTION BY THE LANDSCAPE ARCHITECT IN THE FIELD+ GEOTEXTILE FABRIC WILL BE ACCEPTED UPON RECEIPT OF THE CERTIFICATION FROM THE MANUFACTURER THAT IT IS SUITABLE FOR USE AS SILT FENCE.
3. THE SILT FENCE SHALL BE CONSTRUCTED AT LOCATIONS SHOWN ON THE PLANS OR AS DIRECTED BY THE LANDSCAPE ARCHITECT. THE SILT FENCE SHALL BE ERECTED BEFORE GRADING IS BEGUN IN THE AREA TO BE PROTECTED. POSTS SHALL BE BE INSTALLED AT 6 TO 10 FEET SPACING (CLOSER SPACING SHOULD BE USED IN AREAS WHERE RAPID RUN-OFF IS TO BE EXPECTED) AND FENCE FABRIC ATTACHED. THE WIRE FABRIC AND GEOTEXTILE FABRIC SHALL BE ATTACHED TO THE POSTS ON THE UPHILL SIDE USING STAPLES, HOG-RINGS OR OTHER APPROVED METHOD.
4. DURING THE USEFUL LIFE OF THE SILT FENCE, IT SHALL BE MAINTAINED BY THE CONTRACTOR AND SILT ACCUMULATIONS THAT THREATEN DAMAGE TO THE FENCE SHALL BE REMOVED. AFTER THE USEFULNESS OF THE FENCE HAS ENDED, IT SHALL BE REMOVED AND DISPOSED OF AND THE ACCUMULATED SILT EITHER REMOVED OR DRESSED IN PLACE AS DIRECTED, AND THE ENTIRE AREA SEEDED AND PROTECTED.

(F) TEMPORARY SILT FENCE
SCALE: NTS

AS-BUILT DRAWING

FOR LOCATION OF UNDERGROUND UTILITIES, CALL B.U.D.
1-800-752-6007 2 WORKING DAYS IN ADVANCE OF DIGGING

STATE OF KENTUCKY
KEVIN L. WARNER
LANDSCAPE ARCHITECT
1/9/03

DETAILS

BOLIVAR DEVELOPMENT
200-224 & 225 Bolivar Street
Lexington, Kentucky

JOHN L. CARMAN & ASSOCIATES, INC.
910 Old East Vine Street
Lexington, Kentucky 40507 859/254-6803
Landscape Architecture • Planning • Site Engineering

DRAWN	SBM
DATE	10.23.02
CHECKED	KLW
REVISED	1.9.03
JLC #	02-144

SHEET
SD-6