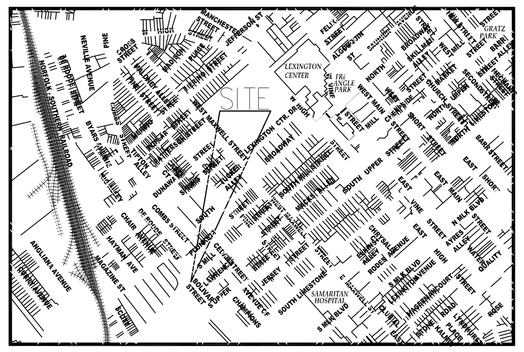

VICINITY MAP (1" = 1000')

LEGEND

- FOUND MONUMENT AS NOTED ON SURVEY
- 24"-LONG, 5/8" DIAMETER REBAR WITH SURVEYOR'S CAP (SET, PLS 3350)
- MAG NAIL WITH ID TAG (SET, PLS 3350)
- CONTROL POINT / BENCHMARK
- STREET LIGHT (LP)
- POWER POLE (PP)
- TELEPHONE POLE (TP)
- FIRE HYDRANT (FH)
- WATER VALVE (WV)
- WATER METER (WM)
- GAS METER (GM)
- GAS VALVE (GV)
- ELECTRIC METER (EM)
- LIGHT POLE (LP)
- POST INDICATOR VALVE (PIV)
- CLEAN OUT (c/o)
- STORM MANHOLE
- SANITARY MANHOLE
- SIGNS
- RCP REINFORCED CONCRETE PIPE
- CMP CORRUGATED METAL PIPE
- * PER PREVIOUS SURVEY - NOT VERIFIED THIS SURVEY
- PVC PLASTIC PIPE
- ADS PLASTIC PIPE
- CPP CORRUGATED PLASTIC PIPE
- VCP VITRIFIED CLAY PIPE
- MH MANHOLE
- INV. INVERT ELEVATION
- F.L. FLOW LINE ELEVATION
- T.G. SURFACE ELEVATION (TOP-OF-GRATE)
- T.R. SURFACE ELEVATION (TOP-OF-RIM)
- CHAIN LINK FENCE
- BOARD FENCE
- WATER LINE
- GAS LINE
- OVERHEAD ELECTRIC
- OVERHEAD TELEPHONE/CABLE
- UNDERGROUND ELECTRIC
- UNDERGROUND TELEPHONE/CABLE
- DECIDUOUS TREE (LEAFY TREE)
- CONIFEROUS TREE (EVERGREEN)
- INDICATES ORIGIN OR OUTLET OF UTILITY OR PIPE IS UNKNOWN
- (99.9') BRACKETED DIMENSIONS ARE PER RECORD SOURCE

UTILITY OWNERS

ELECTRIC
KENTUCKY UTILITIES
500 STONE ROAD
LEXINGTON, KY
BRENT BIRCHELL
(859) 278-9355

WATER
KENTUCKY AMERICAN WATER COMPANY
2300 RICHMOND ROAD
LEXINGTON, KY
GREG TOMCO
(859) 268-6362

WASTE WATER
LFUCG SANITARY DEPARTMENT
LISLE INDUSTRIAL ROAD
LEXINGTON, KY
(859) 258-3410

NATURAL GAS
COLUMBIA GAS COMPANY
2001 MERCER ROAD
LEXINGTON, KY
BRYAN SLONE
(859) 288-0253

TELEPHONE
WINDSTREAM
130 WEST NEW CIRCLE ROAD
LEXINGTON, KY
DOUG BLANDFORD
1-859-357-6250

CABLE TELEVISION
INSIGHT COMMUNICATIONS
2544 PALUMBO DRIVE
LEXINGTON, KY
(859) 514-1400

STATE ROADS
TRANSPORTATION CABINET
DEPARTMENT OF HIGHWAYS
DISTRICT OFFICE NO. 7
763 NEW CIRCLE ROAD NW
LEXINGTON, KENTUCKY

The new lock for Digging Safety in Kentucky
Kentucky 811
Call 811 Before You Dig

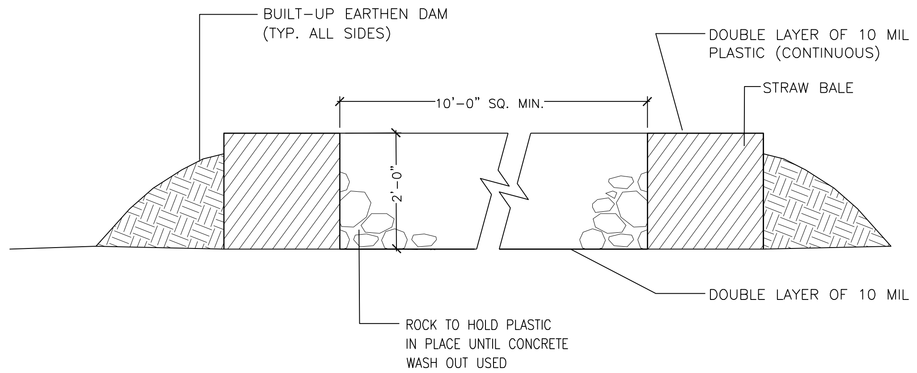

TEMPORARY CONCRETE WASHOUT PIT

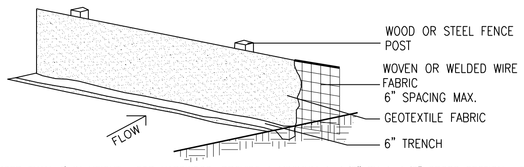

POSTS: HARDWOOD OR STEEL GREATER THAN 4' IN HEIGHT. FOR HARDWOOD, PROVIDE A MINIMUM 1-1/2" BY 1-1/2" CROSS SECTION. FOR STEEL, PROVIDE A 1-1/4" BY 1" T-SECTION WITH PROJECTIONS TO FASTEN WIRE AND FABRIC IN POSITION.
WOVEN OR WELDED WIRE FABRIC: PROVIDE FABRIC WITH A MINIMUM HEIGHT OF 2'-8". REQUIRE AT LEAST 6 HORIZONTAL WIRES SPACED 6-1/4 INCHES OR CLOSER WITH THE TOP AND BOTTOM WIRES 0.134 INCH OR LARGER AND ALL OTHER WIRES 0.1 INCH OR LARGER. REQUIRE 0.1 INCH OR LARGER VERTICAL WIRES SPACED 12" OR CLOSER.
GEOTEXTILE FABRIC: CONFORM TO AASHTO M288 FOR TEMPORARY SILT FENCE. PROVIDE FABRIC WITH A HEIGHT OF 3'. FABRIC TO BE AMOCO 2130 OR EQUAL.

NOTES:
1. THE BOTTOM 6" OF GEOTEXTILE SHALL BE BURIED IN A TRENCH CUT INTO THE GROUND ON UPSTREAM SIDE OF FENCE.
2. FENCE POST AND FABRIC WILL BE ACCEPTED BASED ON VISUAL INSPECTION BY THE LANDSCAPE ARCHITECT IN THE FIELD. GEOTEXTILE FABRIC WILL BE ACCEPTED UPON RECEIPT OF THE CERTIFICATION FROM THE MANUFACTURER THAT IT IS SUITABLE FOR USE AS SILT FENCE.
3. THE SILT FENCE SHALL BE CONSTRUCTED AT LOCATIONS SHOWN ON THE PLANS OR AS DIRECTED BY THE LANDSCAPE ARCHITECT. THE SILT FENCE SHALL BE ERECTED BEFORE GRADING COMMENCES IN THE AREA TO BE PROTECTED. POSTS SHALL BE BE INSTALLED AT 6 TO 10 FEET SPACING (CLOSER SPACING SHOULD BE USED IN AREAS WHERE RAPID RUN-OFF IS TO BE EXPECTED) AND FENCE FABRIC ATTACHED. THE WIRE FABRIC AND GEOTEXTILE FABRIC SHALL BE ATTACHED TO THE POSTS ON THE UPHILL SIDE USING STAPLES, HOG-RINGS OR OTHER APPROVED METHOD.
4. DURING THE USEFUL LIFE OF THE SILT FENCE, IT SHALL BE MAINTAINED BY THE CONTRACTOR AND SILT ACCUMULATIONS THAT THREATEN DAMAGE TO THE FENCE SHALL BE REMOVED. AFTER THE USEFULNESS OF THE FENCE HAS ENDED, IT SHALL BE REMOVED AND DISPOSED OF AND THE ACCUMULATED SILT EITHER REMOVED OR DRESSED IN PLACE AS DIRECTED, AND THE ENTIRE AREA SEEDED AND PROTECTED.

TEMPORARY SILT FENCE

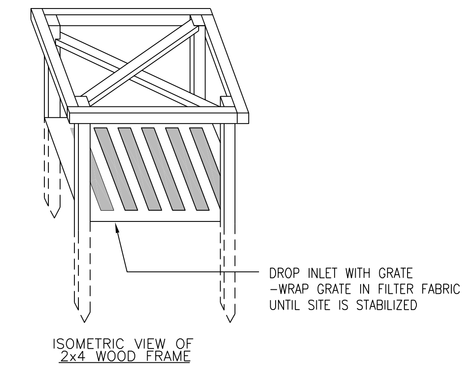

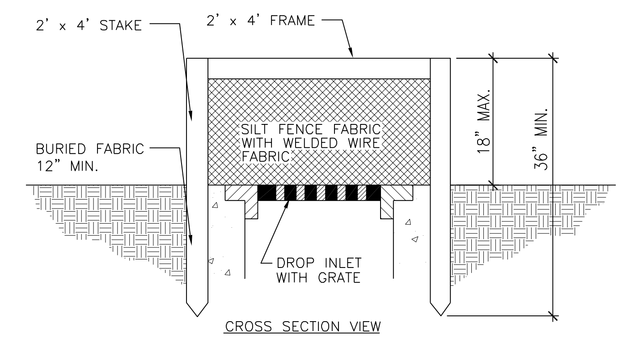

NOTES:
1. USE ABOVE DETAIL IN AREAS WHERE CATCH BASIN / MANHOLE IS SURROUNDED BY TURF.
2. IN AREA WHERE CATCH BASIN / MANHOLE IS LOCATED IN PAVEMENT, ATTACH REFLECTIVE METAL POSTS TO STAKES FOR VISUAL SAFETY.
3. PROVIDE "SUMP" AREA AROUND ALL CATCH BASINS / MANHOLES TO HOLD EXCESSIVE WATER.

TEMPORARY STORM INLET EROSION PROTECTION

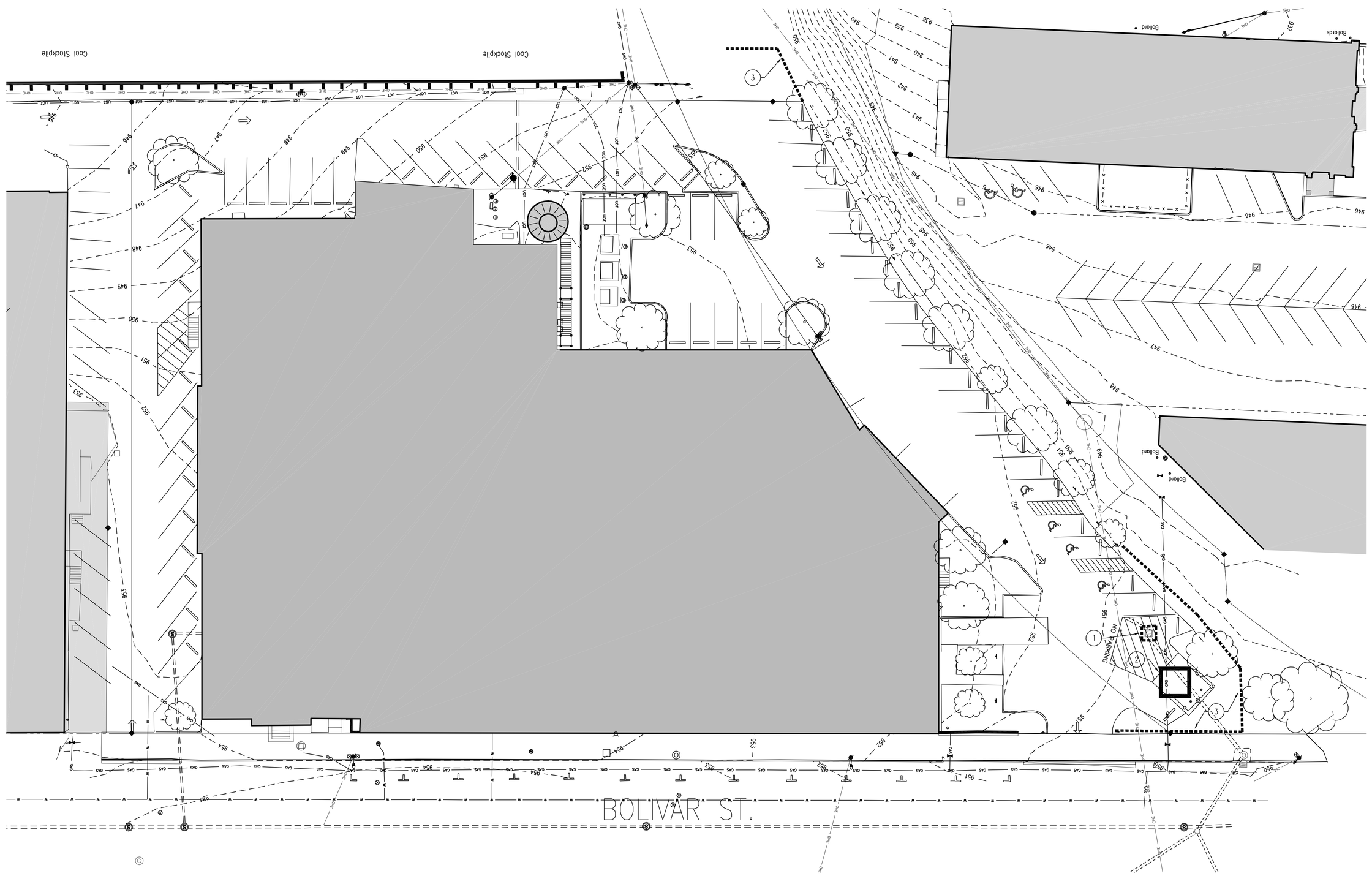

CODED SWPPP NOTES

KEY	DESCRIPTION
1	TEMPORARY STORM INLET EROSION PROTECTION, SEE DETAIL THIS SHEET
2	TEMPORARY CONCRETE WASHOUT PIT, SEE DETAIL THIS SHEET
3	TEMPORARY SILT FENCE, SEE DETAIL THIS SHEET

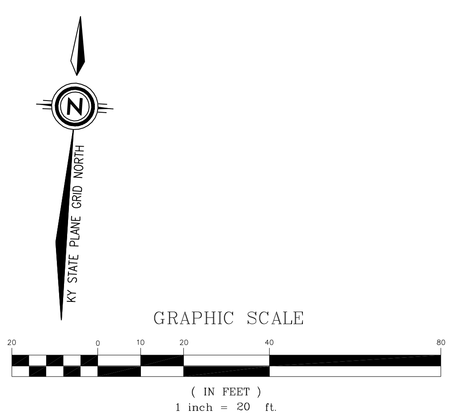

UNIVERSITY LOFTS - Renovate Academic Facility UK School of Art & Visual Studies

Stormwater Pollution Prevention Plan (SWPPP)

NOT FOR CONSTRUCTION

Job Number: 1205 | Date: 05/03/2013 | Drawn By: KLW | Checked By: KLW | Revision:

Omni ARCHITECTS
212 North Upper Street
Lexington, Kentucky 40507-1001
p: 859.252.8664 f: 859.253.2358
www.omnearchitects.com

CARMAN
310 Old Vine Street
Lexington, Kentucky 40507
Tel: (859) 254-9633
Fax: (859) 255-8025
www.carmanstudio.com
ARCHITECTURE | INTERIORS | LANDSCAPE ARCHITECTURE | LAND PLANNING
Site Engineering

This Drawing and the Design shown thereon are the property of Omni Architects. The reproduction, copying or other use of this Drawing or Design without the written consent of Omni Architects is prohibited.

50% CONSTRUCTION DOCUMENTS

C100