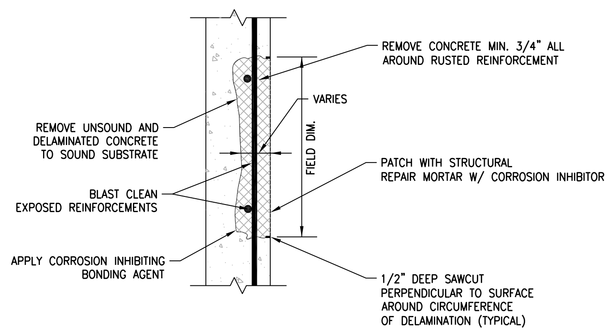

NOTES:
1. SEE SPECIFICATIONS FOR APPROVED MATERIALS AND ADDITIONAL REPAIR PROCEDURES.
2. SEE PRODUCT MANUFACTURER'S TECHNICAL DATA SHEETS FOR MIXING, SURFACE PREPARATION, APPLICATION PROCEDURES, AND CURING.
3. DO NOT SAW CUT EXISTING REINFORCING.
4. REPAIR MORTAR COLOR TO MATCH EXISTING CONC COLOR.

TYPICAL CONCRETE SURFACE REPAIR DETAIL

NOT TO SCALE — A / S3.1

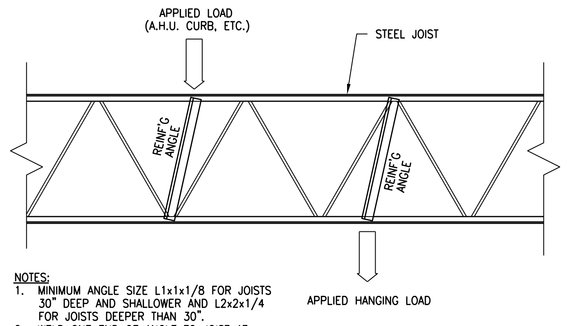

NOTES:
1. MINIMUM ANGLE SIZE L1x1x1/8 FOR JOISTS 30" DEEP AND SHALLOWER AND L2x2x1/4 FOR JOISTS DEEPER THAN 30".
2. WELD ONE END OF ANGLE TO JOIST AT THE POINT OF LOAD APPLICATION AND THE OPPOSITE END TO THE NEAREST JOIST PANEL POINT.
3. DETAIL APPLIES FOR ALL CONCENTRATED LOADS GREATER THAN 250 LBS LOCATED MORE THAN 3" FROM THE CLOSEST JOIST PANEL POINT.

TYPICAL STEEL JOIST REINFORCING DETAIL

NOT TO SCALE — B / S3.1

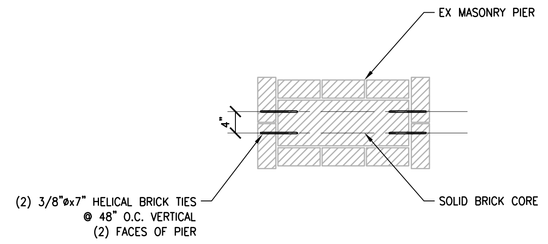

BRICK PIER DETAIL

3/4"=1'-0" — C / S3.1

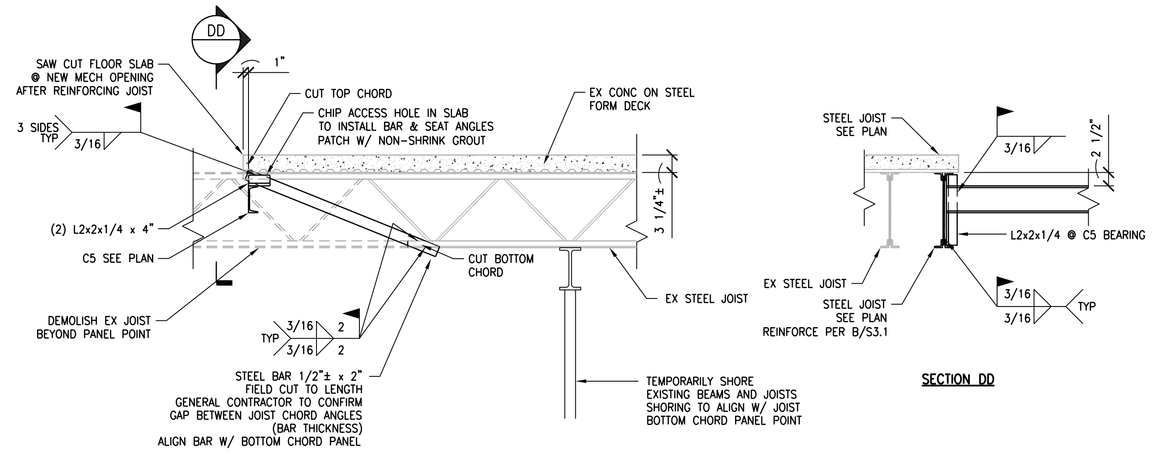

TYPICAL JOIST SHORTENING DETAIL

3/4"=1'-0" — D / S3.1

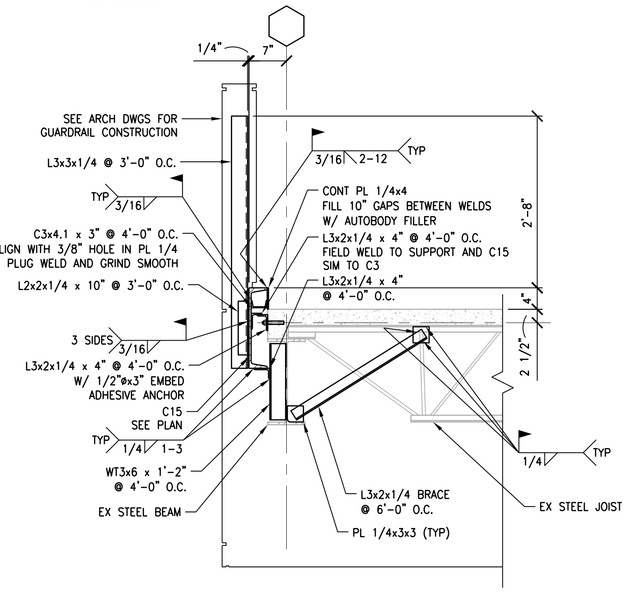

SECTION

3/4"=1'-0" — E / S3.1

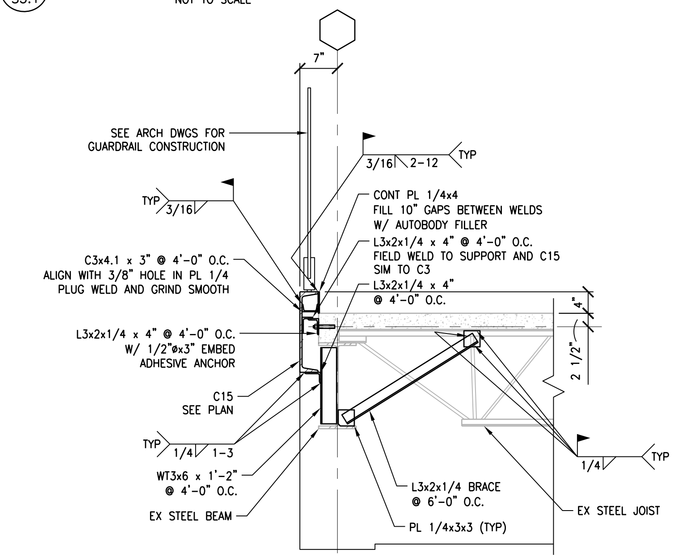

SECTION

3/4"=1'-0" — F / S3.1

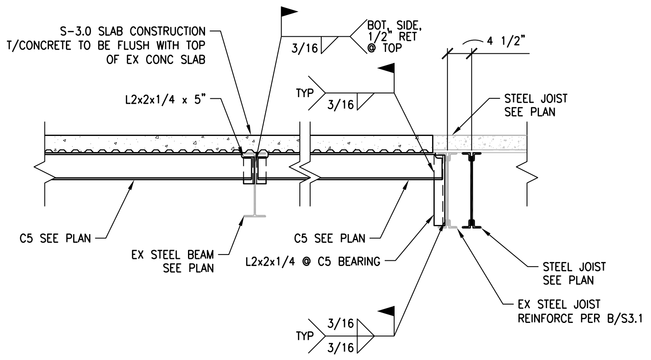

SECTION

3/4"=1'-0" — G / S3.1

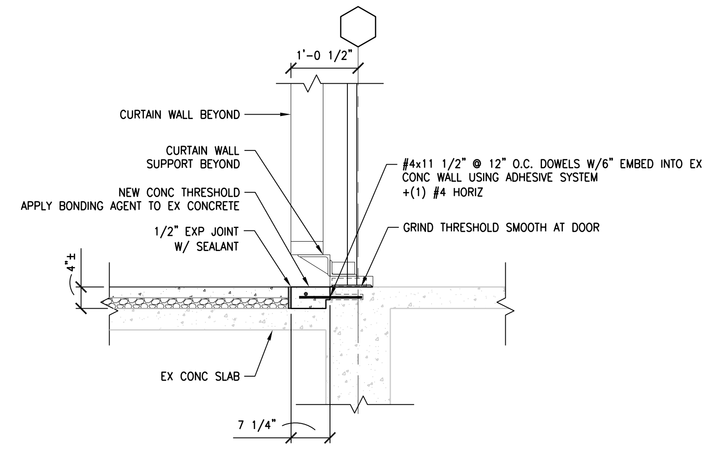

SECTION

3/4"=1'-0" — H / S3.1

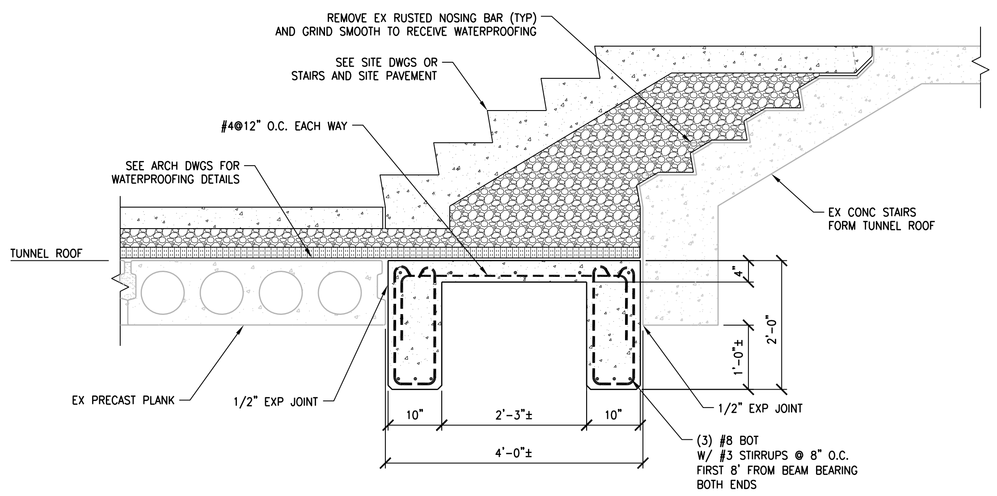

SECTION

3/4"=1'-0" — J / S3.1

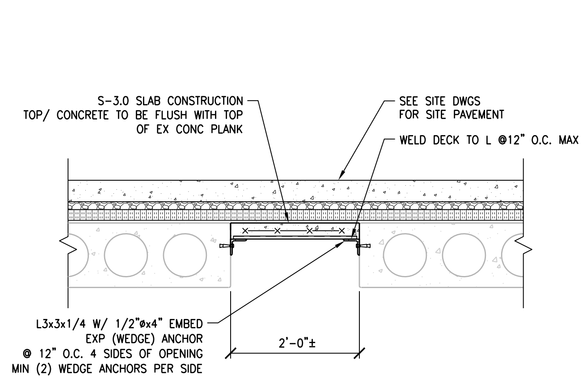

SECTION

3/4"=1'-0" — K / S3.1

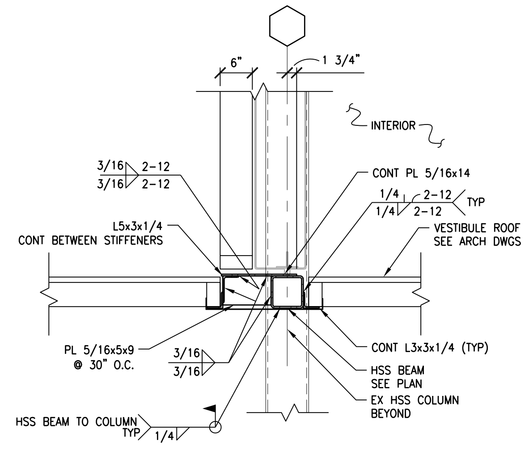

SECTION

3/4"=1'-0" — L / S3.1

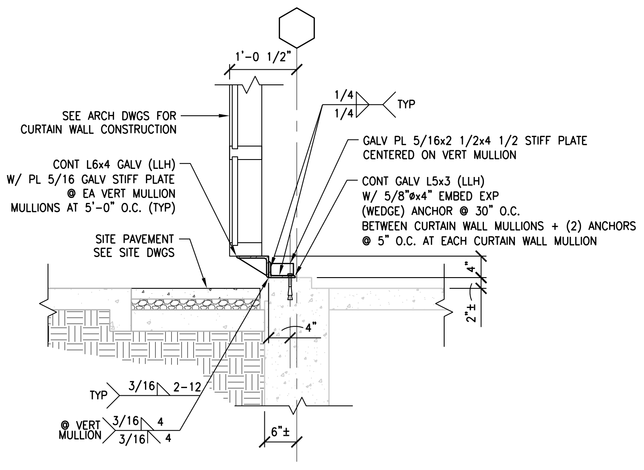

NOTES:
1. LOCATE ANGLE SPLICES HALF WAY BETWEEN VERT MULLIONS. PROVIDE (1) 5/8"x4" EMBED EXP (WEDGE) ANCHOR EA SIDE OF SPLICE @ 5" SPACING.
2. PROVIDE 1/4" EXPANSION JOINT AT SPLICE LOCATIONS AND FILL WITH SEALANT.

SECTION

3/4"=1'-0" — M / S3.1

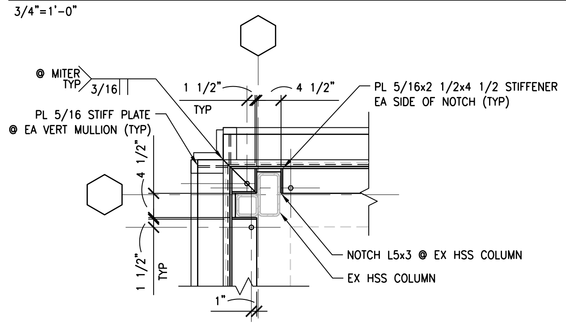

NOTE
MITER ANGLES AT CORNER. SEE M/S3.1 FOR INFORMATION NOT SHOWN.

DETAIL

3/4"=1'-0" — N / S3.1

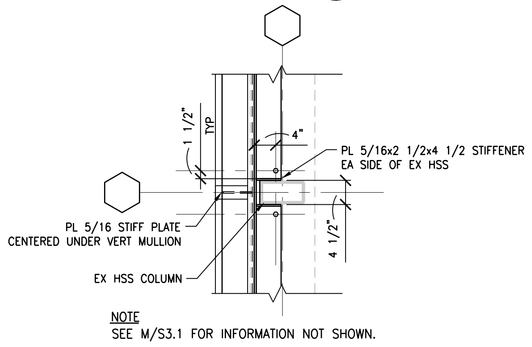

NOTE
SEE M/S3.1 FOR INFORMATION NOT SHOWN.

DETAIL

3/4"=1'-0" — P / S3.1

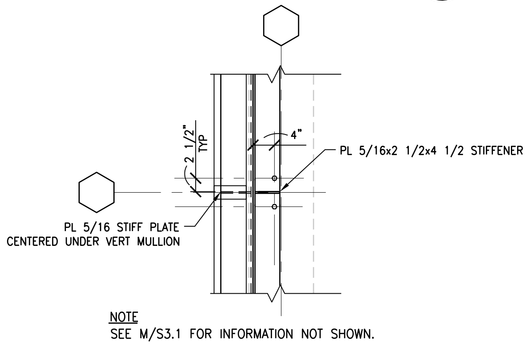

NOTE
SEE M/S3.1 FOR INFORMATION NOT SHOWN.

DETAIL

3/4"=1'-0" — Q / S3.1

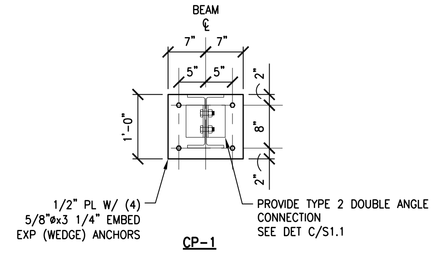

CP-1

CONNECTION PLATE DETAIL

3/4"=1'-0" — R / S3.1

STATE OF KENTUCKY — NICHOLAS C. BROWN — LICENSED PROFESSIONAL ENGINEER — 26377

©BROWN + KUBICAN, PSC

REVISIONS	DATE
1	
2	
3	
4	
5	
6	
7	
8	
9	

COUNCIL OF STATE GOVERNMENTS - HEADQUARTERS BUILDING
2760 RESEARCH PARK DRIVE LEXINGTON, KY 40511

RECORD DATE

DETAILS

DRAWN BY **NAR**
CHECKED BY **SCB**
A & E FILE NO **13013.01**
NOV 2013

COMMONWEALTH OF KENTUCKY
FINANCE AND ADMINISTRATION CABINET
DIVISION OF ENGINEERING
DEPARTMENT FOR FACILITIES MANAGEMENT
FRANKFORT, KENTUCKY

DRAWING NO **S-3.1**

REVIEWED DIV. OF ENGR.

ENGR. FILE NO 785-C6BR-BC01-00

BROWN + KUBICAN
STRUCTURAL ENGINEERS PSC
2224 Young Drive
Lexington, KY 40505
Phone: 859-543-0933
Fax: 859-543-0733

Omni ARCHITECTS
212 North Upper Street
Lexington, Kentucky 40507-1001
p 859.252.6664 f 859.253.2358
www.omniarchitects.com

AGENCY AUTHORIZED AGENT _____ DATE _____
APPROVED FOR PROGRAM CONCEPT ONLY
DIVISION OF ENGINEERING _____ DATE _____
APPROVED FOR PROGRAM CONCEPT ONLY

11/8/2013 4:29:02 PM: nrednond