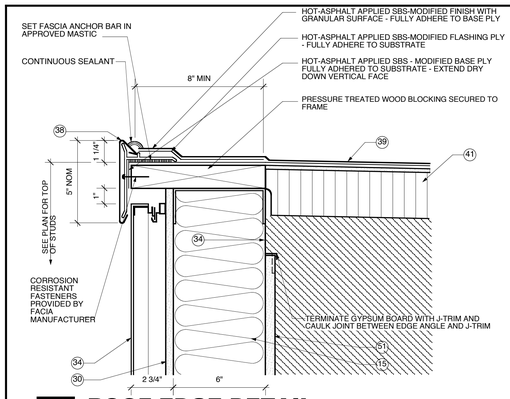

1 ROOF EDGE DETAIL
3" = 1'-0"

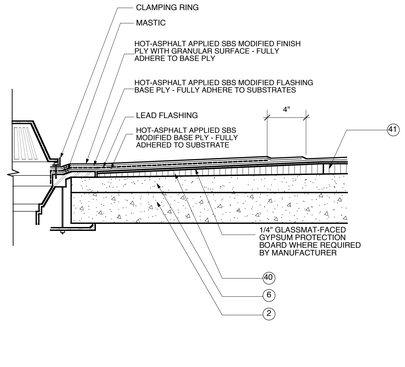

2 ROOF DRAIN IN CONCRETE DECK
1 1/2" = 1'-0"

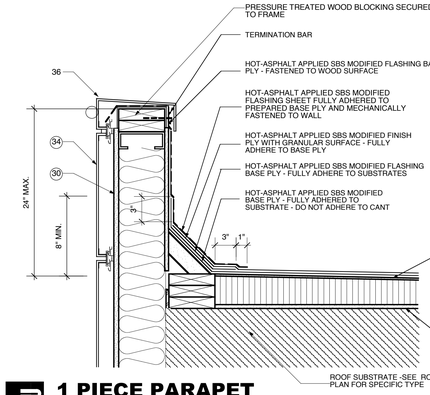

3 1 PIECE PARAPET
1 1/2" = 1'-0"

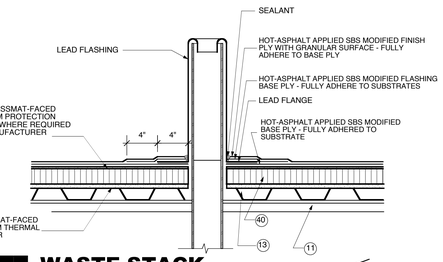

4 WASTE STACK
1 1/2" = 1'-0"

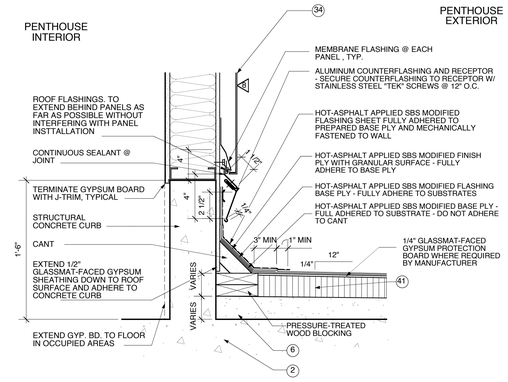

5 DETAIL @ CURB
1 1/2" = 1'-0"

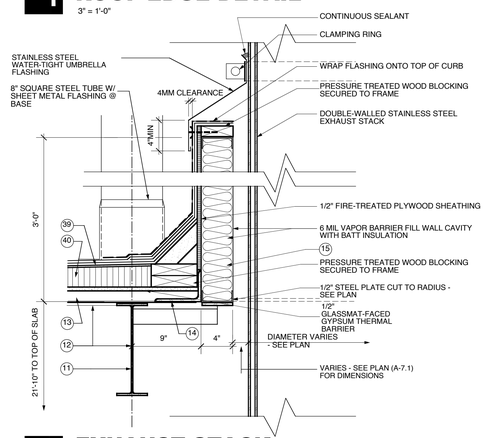

6 EXHAUST STACK
1 1/2" = 1'-0"

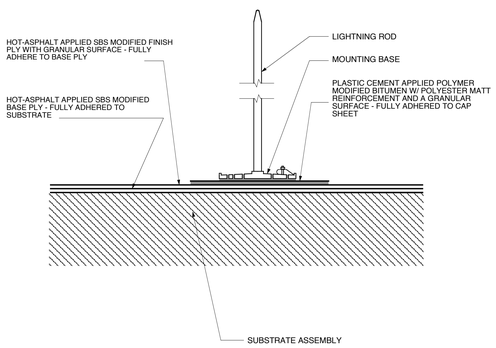

7 LIGHTNING ROD
3" = 1'-0"

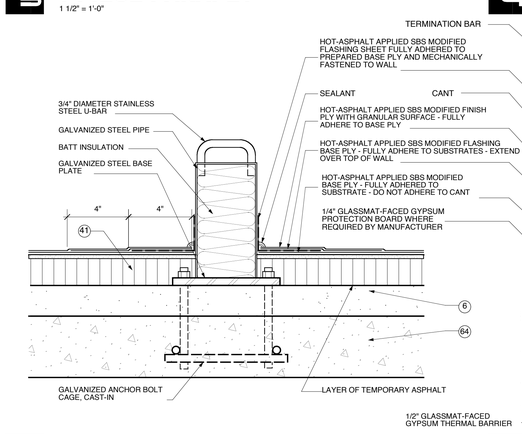

8 SAFETY TIEBACK ANCHORS
3" = 1'=0"

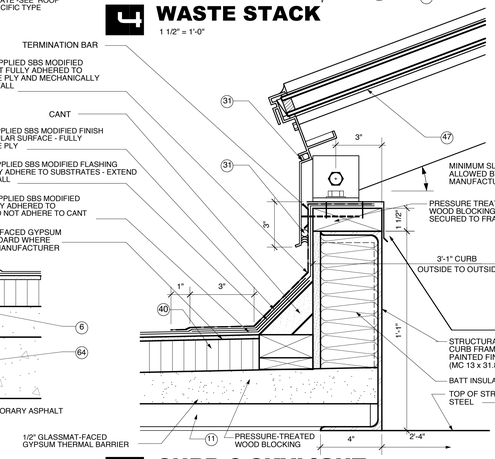

9 CURB @ SKYLIGHT
3' = 1'-0"

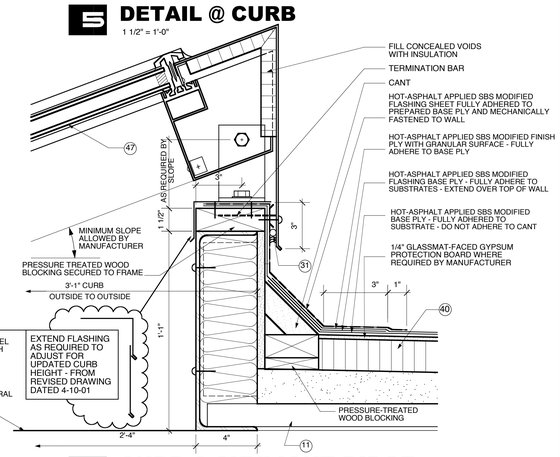

10 CURB @ SKYLIGHT RIDGE
3' = 1'-0"

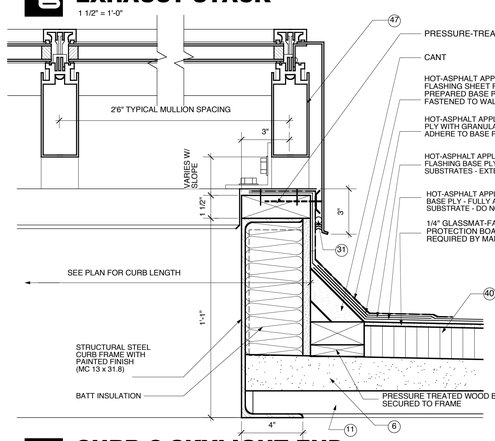

11 CURB @ SKYLIGHT END
3" = 1'-0"

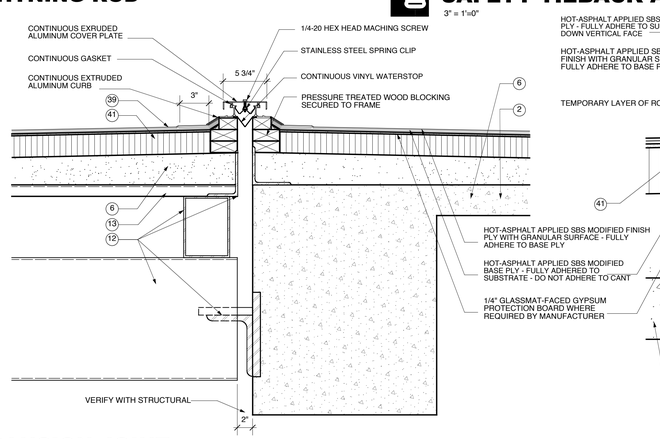

12 EXPANSION JOINT
1 1/2" = 1'-0"

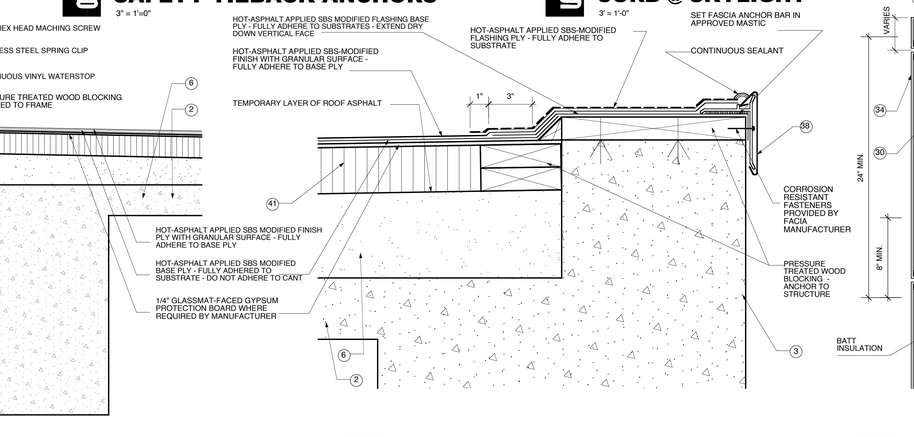

13 ROOF EDGE
3" = 1'-0"

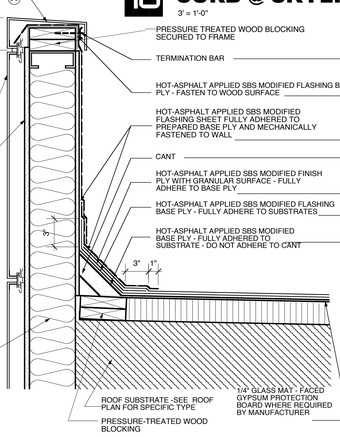

14 2 PIECE PARAPET
1 1/2" = 1'-0"

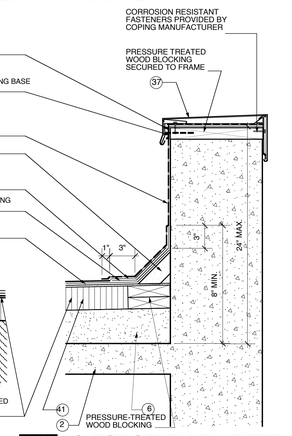

15 1 PIECE PARAPET
1 1/2" = 1'-0"

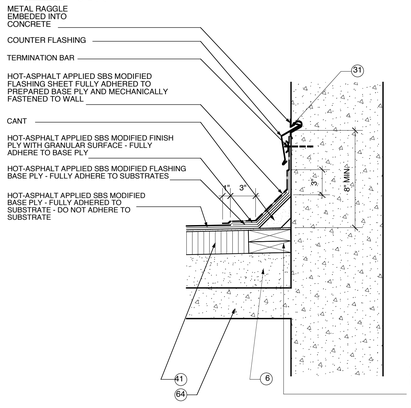

16 COUNTER FLASHING
1 1/2" = 1'-0"

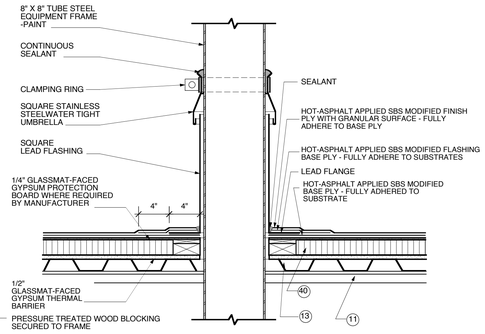

17 EQUIPMENT FRAME FLASHING
1 1/2" = 1'-0"

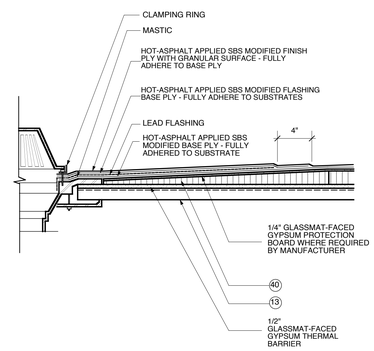

18 ROOF DRAIN IN METAL DECK
1 1/2" = 1'-0"

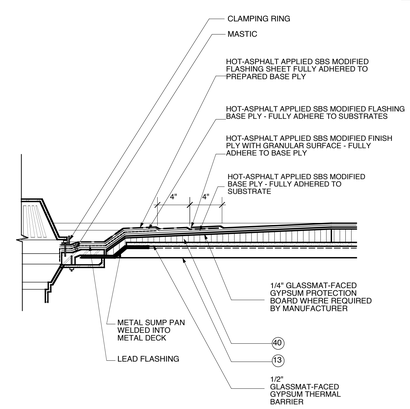

19 SUMPED ROOF DRAIN IN METAL DECK
1 1/2" = 1'-0"

NOTE:
ALL SBS MODIFIED ROOF DETAILS ARE BASED ON SIPLAST PARADIENESYSTEM

RECORD DOCUMENTS

These Record Documents have been prepared based on information provided by others. The Consultant has not verified the accuracy and/or completeness of this information and shall not be responsible for any errors or omissions that may be incorporated as a result of erroneous information provided by others.

Omni ARCHITECTS — 12/1/02 DATE

ROOF DETAILS

A-7.3

MICHAEL W. JACOBS REGISTERED NO. 2368 COMMONWEALTH OF KENTUCKY ARCHITECT

REVISIONS	DATE
1	
2	
3	
4	
5	
6	
7	
8	
9	

NORTHERN KENTUCKY UNIVERSITY
NATURAL SCIENCE BUILDING

RECORD DATE
DRAWN BY: EZ, MB, JB
CHECKED BY: MWJ
A & E FILE Nº
DATE: 6/99

COMMONWEALTH OF KENTUCKY
FINANCE AND ADMINISTRATION CABINET
DIVISION OF ENGINEERING
DEPARTMENT FOR FACILITIES MANAGEMENT
FRANKFORT, KENTUCKY

Omni Architects

DRAWING Nº: A-7.3
REVIEWED DIV. OF ENGR.
ENGR. FILE Nº: I-111

AGENCY AUTHORIZED AGENT — DATE
DIVISION OF ENGINEERING — APPROVED FOR PROGRAM CONCEPT ONLY — DATE
APPROVED FOR PROGRAM CONCEPT ONLY