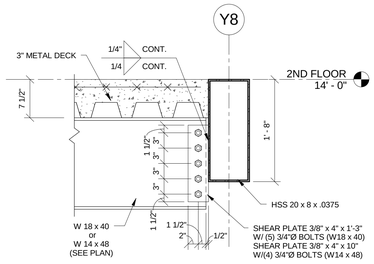

4 TYPE EDGE @ 2ND
1" = 1'-0"

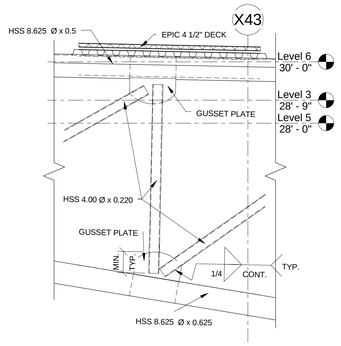

2 CALL OUT OF SPECIAL TRUSS GUSSET
1/2" = 1'-0"

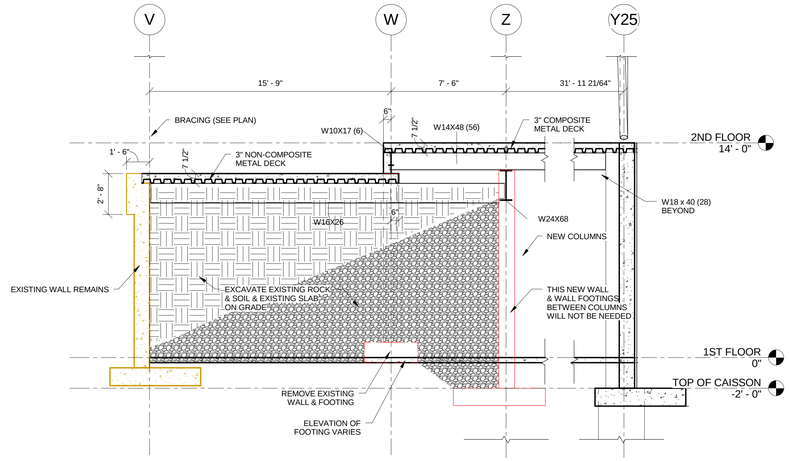

10 SECTION THRU RUNNING TRACK
1/4" = 1'-0"

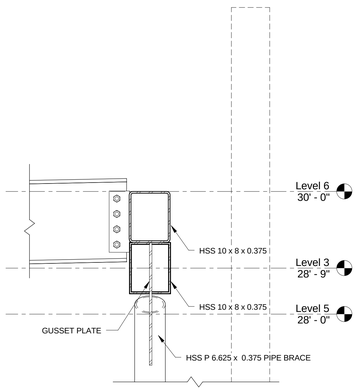

5 TYPICAL EDGE @ ROOF
1" = 1'-0"

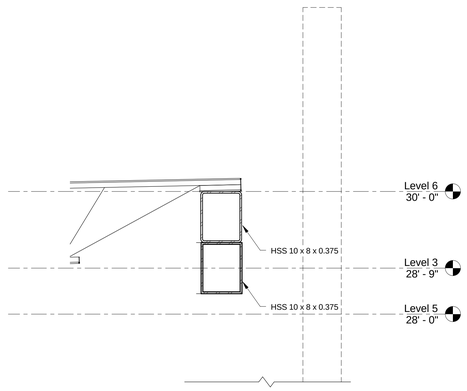

6 TYPICAL EDGE @ ROOF1
1" = 1'-0"

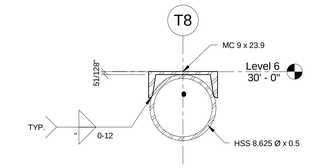

12 TOP TRUSS SPECIAL
1 1/2" = 1'-0"

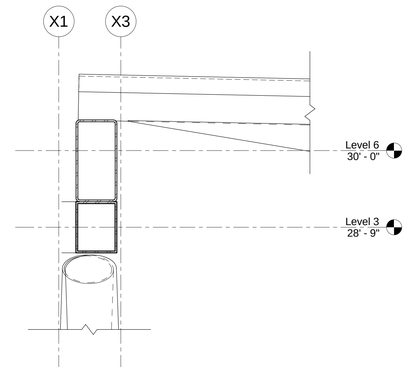

3 Callout of POOL AREA SECTION
1" = 1'-0"

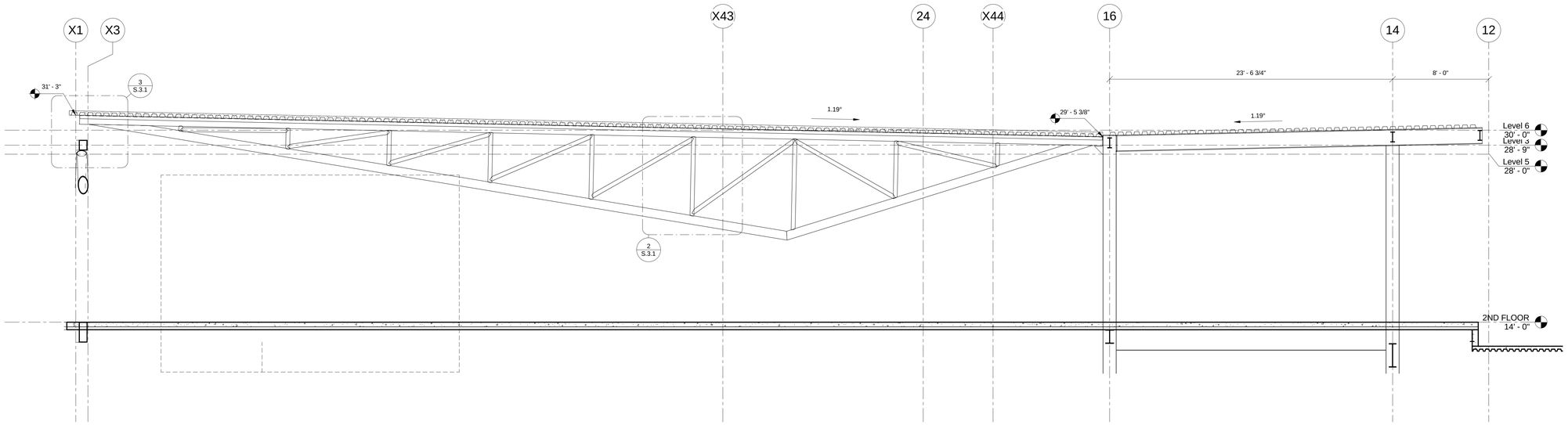

7 POOL AREA SECTION
1/4" = 1'-0"

NOT FOR CONSTRUCTION

bfmj
Buell Fryer McReynolds Jared
Consulting Structural Engineers
2365 Harrodsburg Road, Suite B325
LEXINGTON, KY 40504
PH: (859) 278-3030
FAX: (859) 278-3050
BFMJ No. 11107

Omni ARCHITECTS
212 North Upper Street
Lexington, Kentucky 40507-1001
p 859.252.6664 f 859.253.2358
www.omniarchitects.com

Northern Kentucky University - Student Recreation Center

#	Revision Date

Drawing Name: SECTIONS & DETAILS
NKU Project Number:
Project Number:
Date: Issue Date
Drawn By: Author
Checked By: Checker

S.3.1

5/10/2013 9:22:09 AM