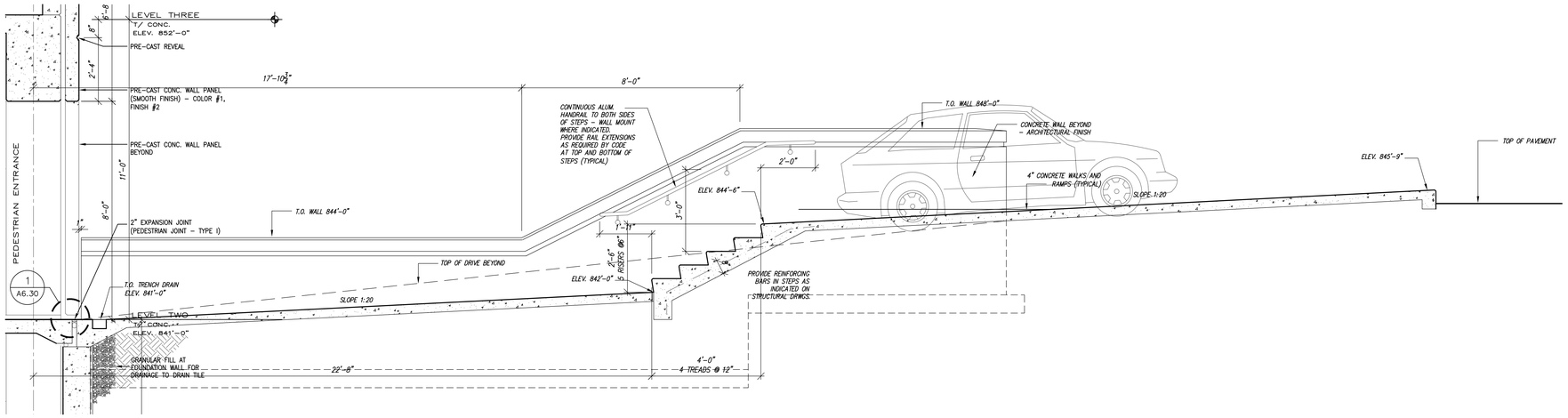

1 A1.11 **SOUTH PEDESTRIAN ENTRANCE SECTION** 1/2" = 1'-0"

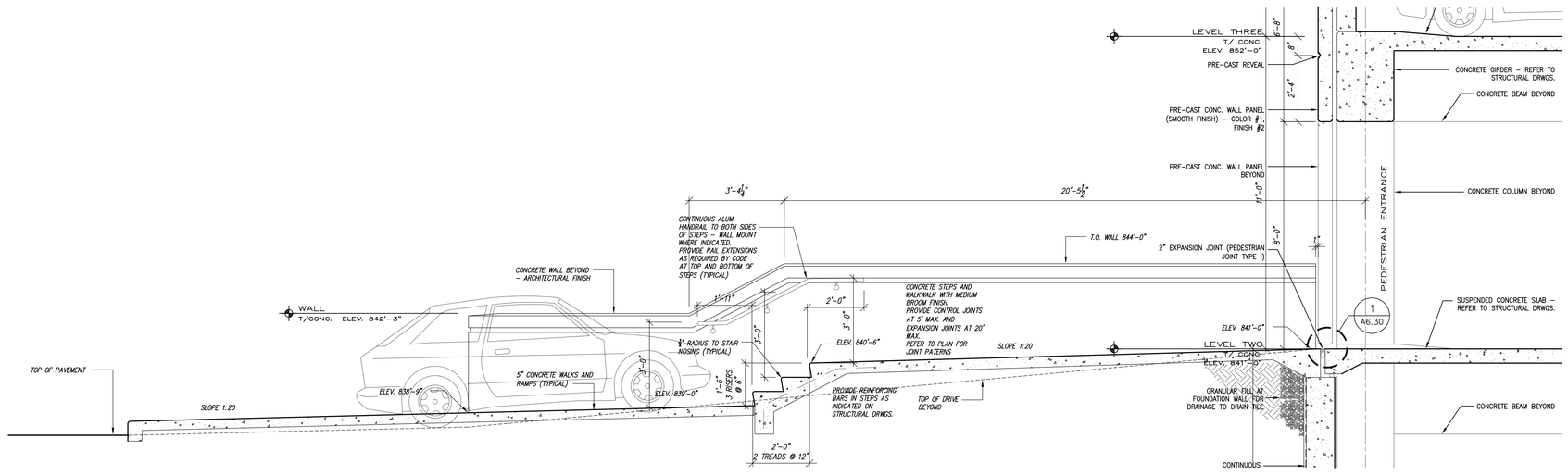

2 A1.11 **NORTH PEDESTRIAN ENTRANCE SECTION** 1/2" = 1'-0"

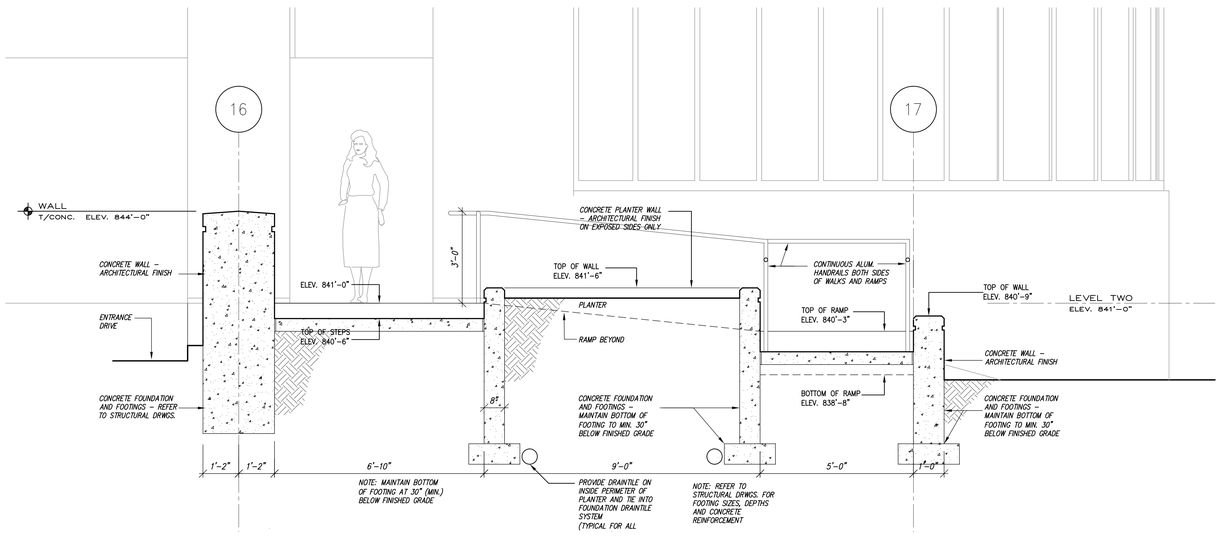

3 A1.11 **NORTH PEDESTRIAN ENTRANCE SECTION** 1/2" = 1'-0"

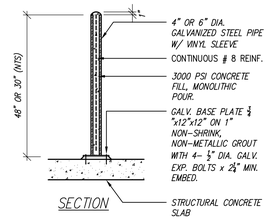

4 A1.11 **BOLLARD DETAIL** 1/2" = 1'-0"

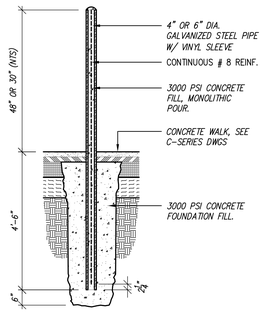

5 A1.11 **BOLLARD DETAIL** 1/2" = 1'-0"

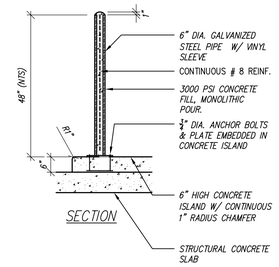

6 A1.11 **ISLAND BOLLARD** 1/2" = 1'-0"

BID PACKAGE	ISSUED	BID PACKAGE	ISSUED

	REVISIONS	DATE
1	RECORD DRAWINGS	6/20/05
2		
3		
4		
5		
6		
7		
8		

COMMONWEALTH OF KENTUCKY
J. L. Wyler 3696
J. Tepe Wurtenberger 3719
REGISTERED ARCHITECTS

PARKING GARAGE No. 2
NORTHERN KENTUCKY UNIVERSITY
HIGHLAND HEIGHTS, KENTUCKY

RECORD DATE

DRAWN BY AE

CHECKED BY RAS

A&E FILE NO. 2000-06

SCALE AS NOTED

DATE 10/30/2003

PEDESTRIAN WALK & RAMP DETAILS

COMMONWEALTH OF KENTUCKY
FINANCE AND ADMINISTRATION CABINET
DEPARTMENT FOR FACILITIES MANAGEMENT
DIVISION OF ENGINEERING
FRANKFORT, KENTUCKY

Champlin/Houpt Inc.
Architects
202 Farmington Drive, ste. 101
Lakeside Park, Kentucky 41017
Tel (859) 331-5995
Fax (859) 331-5996

DRAWING NO. **A1.11**

REVIEWED DIV. OF ENGR.

FOR INTENT ONLY

ENGR. FILE NO. PNKU0590

AGENCY AUTHORIZED AGENT _____ DATE _____
APPROVED FOR PROGRAM CONCEPT ONLY

DIVISION OF ENGINEERING _____ DATE _____
APPROVED FOR PROGRAM CONCEPT ONLY

J:\417\2000-03 Parking Garage\phase d\drawings\A1-10 A1-11 A1-12.dwg Jan 05, 2005-3:14pm - (C) Champlin/Houpt - ape