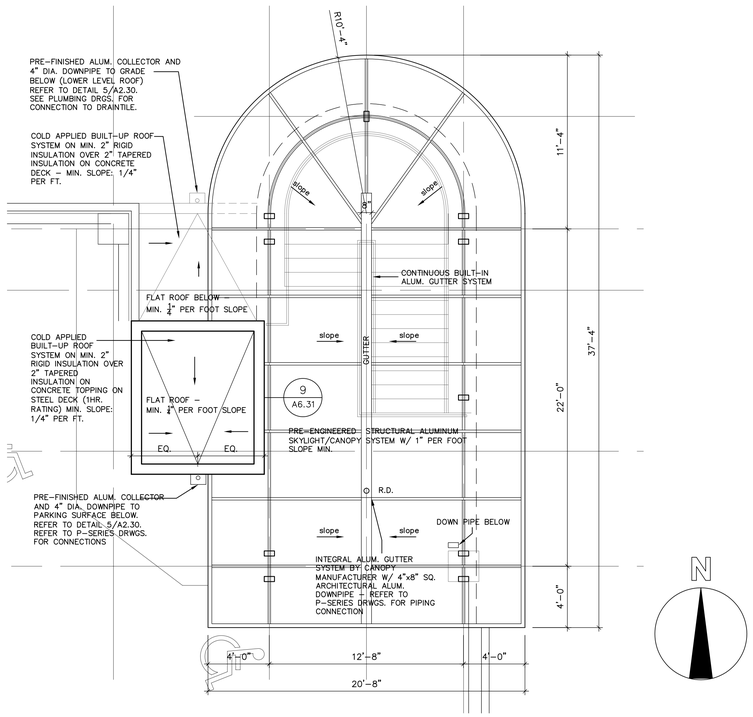

1 A2.30 **CANOPY/ROOF PLAN - STAIR 1** 1/4"=1'-0"

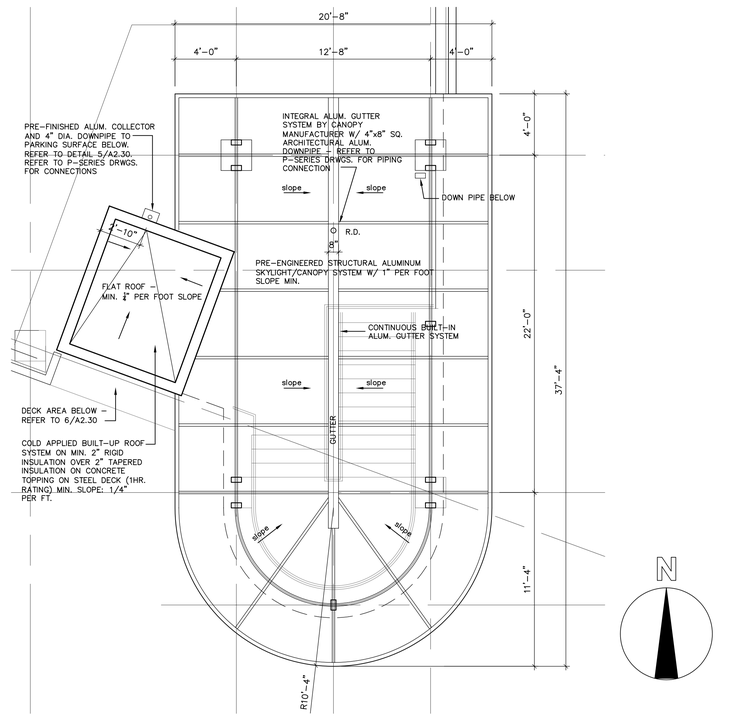

2 A2.30 **CANOPY/ROOF PLAN - STAIR 2** 1/4"=1'-0"

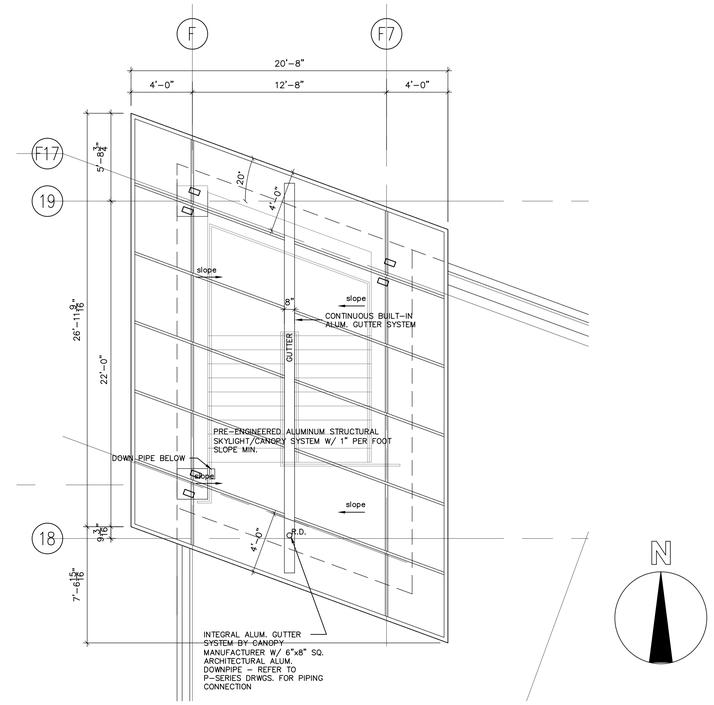

3 A2.30 **CANOPY PLAN - STAIR 3** 1/4"=1'-0"

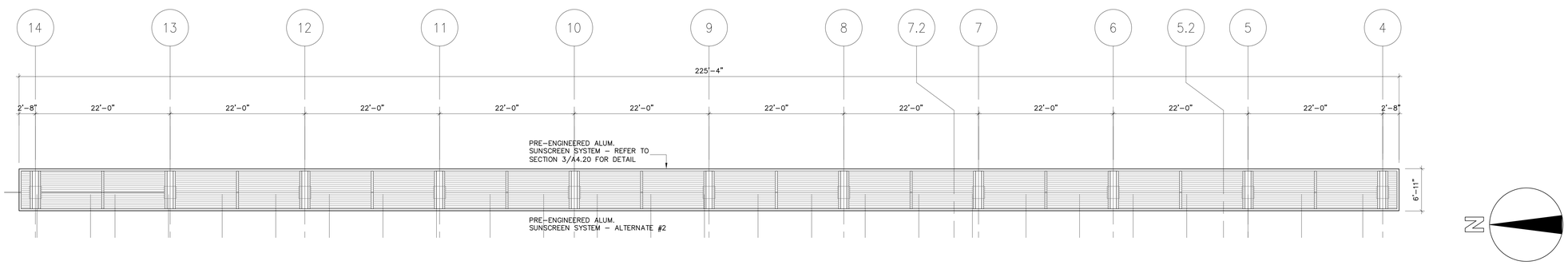

4 A2.30 **S U N S C R E E N P L A N (ADD ALTERNATE #2)** 1/8"=1'-0"

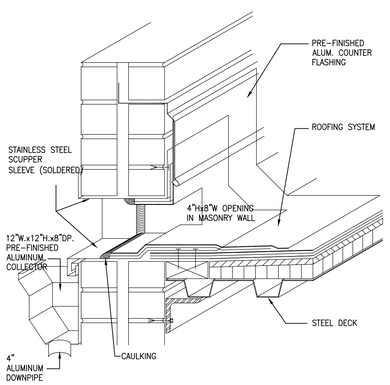

5 A2.30 **SCUPPER** 3" = 1'-0"

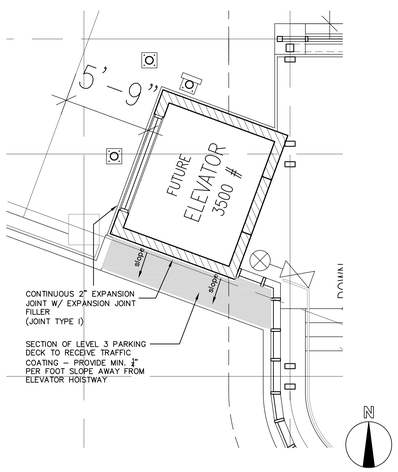

6 A2.30 **PARTIAL DECK PLAN** 1/4"=1'-0"

	BID PACKAGE	ISSUED	BID PACKAGE	ISSUED

	REVISIONS	DATE
1	RECORD DRAWINGS	6/20/05
2		
3		
4		
5		
6		
7		
8		

COMMONWEALTH OF KENTUCKY
J. L. Wyler 3696
J. Tepe Wurtenberger 3719
REGISTERED ARCHITECTS

PARKING GARAGE No. 2
NORTHERN KENTUCKY UNIVERSITY
HIGHLAND HEIGHTS, KENTUCKY

RECORD DATE

CANOPY/ROOF PLANS - STAIR 1, 2 & 3

DRAWING NO. **A2.30**

DRAWN BY AE
CHECKED BY RAS

COMMONWEALTH OF KENTUCKY
FINANCE AND ADMINISTRATION CABINET
DEPARTMENT FOR FACILITIES MANAGEMENT
DIVISION OF ENGINEERING
FRANKFORT, KENTUCKY

A&E FILE NO. 2890-00
SCALE AS NOTED
DATE 10/30/2003

Champlin/Haupt Inc. Architects
202 Farmington Drive, ste. 101
Lakeside Park, Kentucky 41017
Tel (859) 331-5995
Fax (859) 331-5996

REVIEWED DIV. OF ENGR.
FOR INTENT ONLY
ENGR. FILE NO. PNKU0590

AGENCY AUTHORIZED AGENT _____ DATE _____
APPROVED FOR PROGRAM CONCEPT ONLY

DIVISION OF ENGINEERING _____ DATE _____
APPROVED FOR PROGRAM CONCEPT ONLY

J:\417\2890-00 Parking Garage\phase d\drawings\A2-30.dwg Jan 05, 2006-3:30pm – (C) Champlin/Haupt – ape