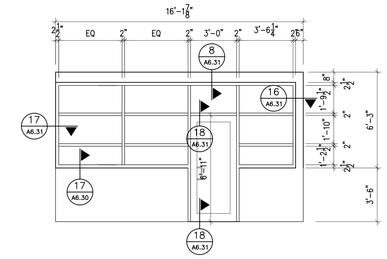

LEVEL 3
SOUTH ELEV.

ALSO REFER TO DRWG. 2/A7.23

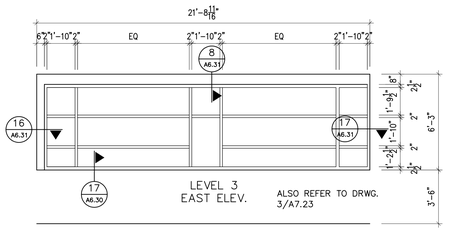

LEVEL 3
EAST ELEV.

ALSO REFER TO DRWG. 3/A7.23

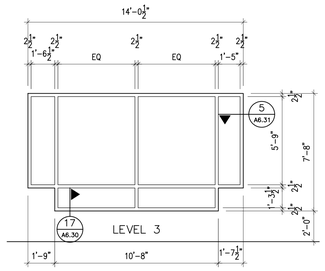

LEVEL 3

QUANTITY: 2

ALSO REFER TO DRWG. 2/A7.21 & 2/A7.22

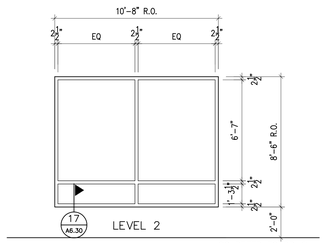

LEVEL 2

QUANTITY: 2

ALSO REFER TO DRWG. 2/A7.21 & 2/A7.22

DOOR SCHEDULE

	OPG NO.	LOCATION TO LOCATION FROM	TO	FRAME OPENING WTH	HGT	DOOR QUAN	MTL	TYPE	THK	FRAME MTL	HEAD	JAMB	SILL	FIRE RATING (HOURS)	HDW SET	REMARKS	SECURITY FUNCTION
LEVEL ONE	100	STAIR 101	STORAGE RM. 100	3'-0"	7'-0"	1	HM	A	1 3/4"	HM	5/A6.10	4/A6.10	–	1-1/2 HR	1		
	104	STAIR 101	ELEV. EQUIP. RM. 104	3'-0"	7'-0"	1	HM	A	1 3/4"	HM	5/A6.10	4/A6.10	–	1-1/2 HR	1		
	105	STAIR 102	ELEV. EQUIP. RM. 105	3'-0"	7'-0"	1	HM	A	1 3/4"	HM	5/A6.10	4/A6.10	–	1 1/2 HR	1		
	106	PARKING	ELEC. RM. 106	3'-0"	7'-0"	1	HM	A	1 3/4"	HM	5/A6.10	4/A6.10	–	1 1/2 HR	1		
	107	PARKING	DETENTION TANK 107	3'-0"	3'-0"	1	HM	C	1 3/4"	HM	6B/A6.10	6A/A6.10	–	–	1	DETENTION TANK ACCESS DOOR	
LEVEL THREE	303	PARKING	STAIR 303	3'-0"	7'-0"	1	ALUM.	B	1 3/4"	ALUM.	8/A6.31	–	–	–	2		

3

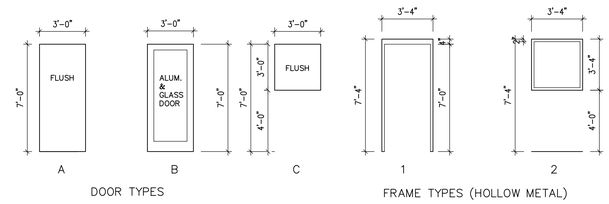

NOTE: 1 – PROVIDE 4" HEADS FOR ALL HOLLOW METAL DOORS IN CMU WALLS – TYPICAL FOR BOTH UPPER AND LOWER LEVELS

3 A6.10 **EXTERIOR STOREFRONT ELEVATIONS STAIR #3** 1/4" = 1'

2 A6.10 **INTERIOR STOREFRONT ELEVATIONS STAIR #1 AND STAIR #2** 1/4" = 1'

1 A6.10 **DOOR SCHEDULE / DOOR AND FRAME TYPES**

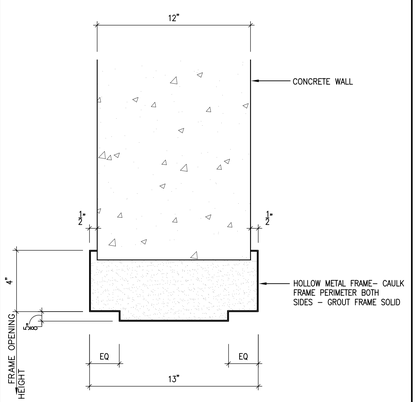

6B A6.10 **DOOR HEAD** 3"=1'–0"

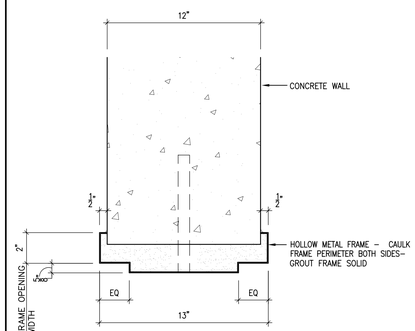

6A A6.10 **DOOR JAMB** 3"=1'–0"

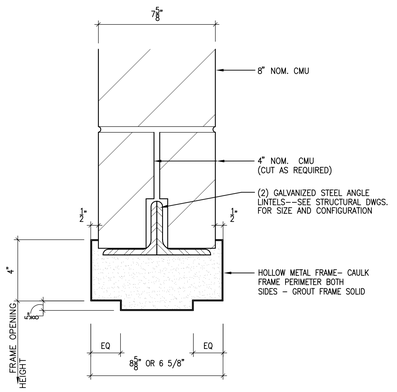

5 A6.10 **DOOR HEAD** 3"=1'–0"

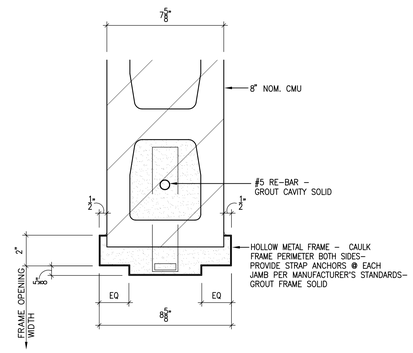

4 A6.10 **DOOR JAMB** 3"=1'–0"

HARDWARE MANUFACTURERS:

	(APPROVED)	(OTHER)
HINGES	McKINNEY	HAGER, STANLEY
LOCKSETS	SARGENT	NO SUBSTITUTION
EXIT DEVICES	SARGENT	PRECISION
CLOSERS & MAGNETIC HOLD OPEN	SARGENT	LCN
CYLINDERS	KABA	NO SUBSTITUTION
KICKPLATES	ROCKWOOD	TRIMCO, BALDWIN
THRESHOLDS DOOR SEALS & WEATHER STRIP	NATIONAL GUARD	PEMKO
STOPS, FLUSH BOLTS	IVES	ROCKWOOD, GLYNN JOHNSON
OH STOPS	SARGENT	ABH

HARDWARE SET #1

3 HINGES TA2714 4.5 X 4.5 26D
1 LOCKSET 8204 LNL L/C 32D
1 CYLINDER 4701–25–1–L5–218
1 CLOSER 281 O OR P10 EN
1 STOP 407B 32D

HARDWARE SET #2

1 CYLINDER 4702–25–1–L5–210
BALANCE OF HARDWARE BY DOOR SUPPLIER

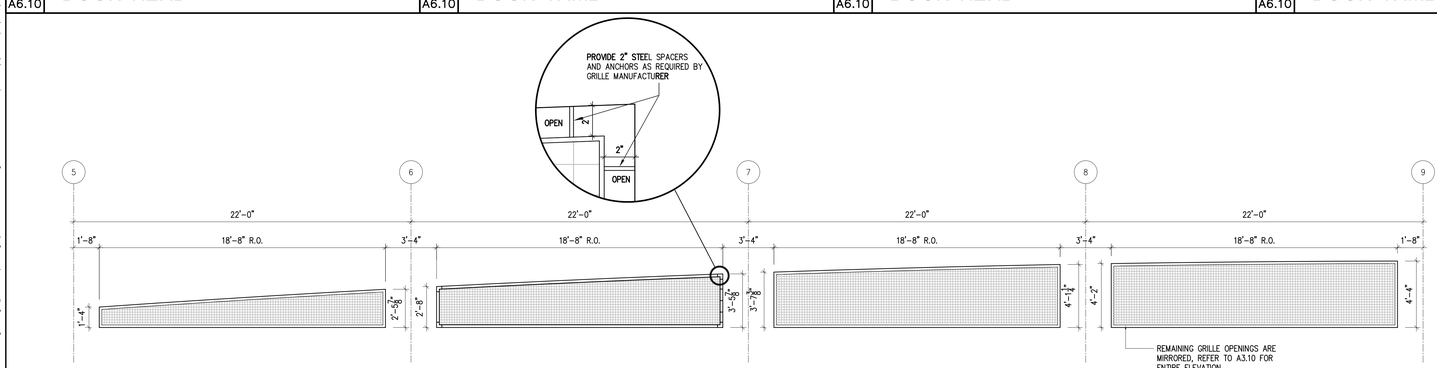

7 A6.10 **SECURITY GRILLE ELEVATION (along Kenton Drive)** 1/4" = 1'–0"

8 A6.10 **DOOR HARDWARE SCHEDULE**

	BID PACKAGE	ISSUED	BID PACKAGE	ISSUED

	REVISIONS	DATE
1	RECORD DRAWINGS	6/20/05
2		
3		
4		
5		
6		
7		
8		

COMMONWEALTH OF KENTUCKY
J. L. Wyler 3696
J. Tepe Wurtenberger 3719
REGISTERED ARCHITECTS

PARKING GARAGE No. 2
NORTHERN KENTUCKY UNIVERSITY
HIGHLAND HEIGHTS, KENTUCKY

RECORD DATE

DOOR SCHEDULE & DETAILS

DRAWING NO. **A6.10**

DRAWN BY AE
CHECKED BY RHS

COMMONWEALTH OF KENTUCKY
FINANCE AND ADMINISTRATION CABINET
DEPARTMENT FOR FACILITIES MANAGEMENT
DIVISION OF ENGINEERING
FRANKFORT, KENTUCKY

A&E FILE NO. 2512-00
SCALE AS NOTED
DATE 10/30/2003

Champlin/Haupt Inc.
Architects
202 Farmington Drive, ste. 101
Lakeside Park, Kentucky 41017
Tel (859) 331-5995
Fax (859) 331-5996

REVIEWED DIV. OF ENGR.
FOR INTENT ONLY
ENGR. FILE NO. PNKU0590

AGENCY AUTHORIZED AGENT _____ DATE _____
APPROVED FOR PROGRAM CONCEPT ONLY

DIVISION OF ENGINEERING _____ DATE _____
APPROVED FOR PROGRAM CONCEPT ONLY

J:\417\2590-00 Parking Garage\phase d\drawings\A6-10 & A6-11.dwg Jan 05, 2006-3:52pm – (C) Champlin/Haupt – aae